BOHN®

The Cold Standard™

BR-SPEC94D
March, 2000

Replaces
BR-SPEC94C

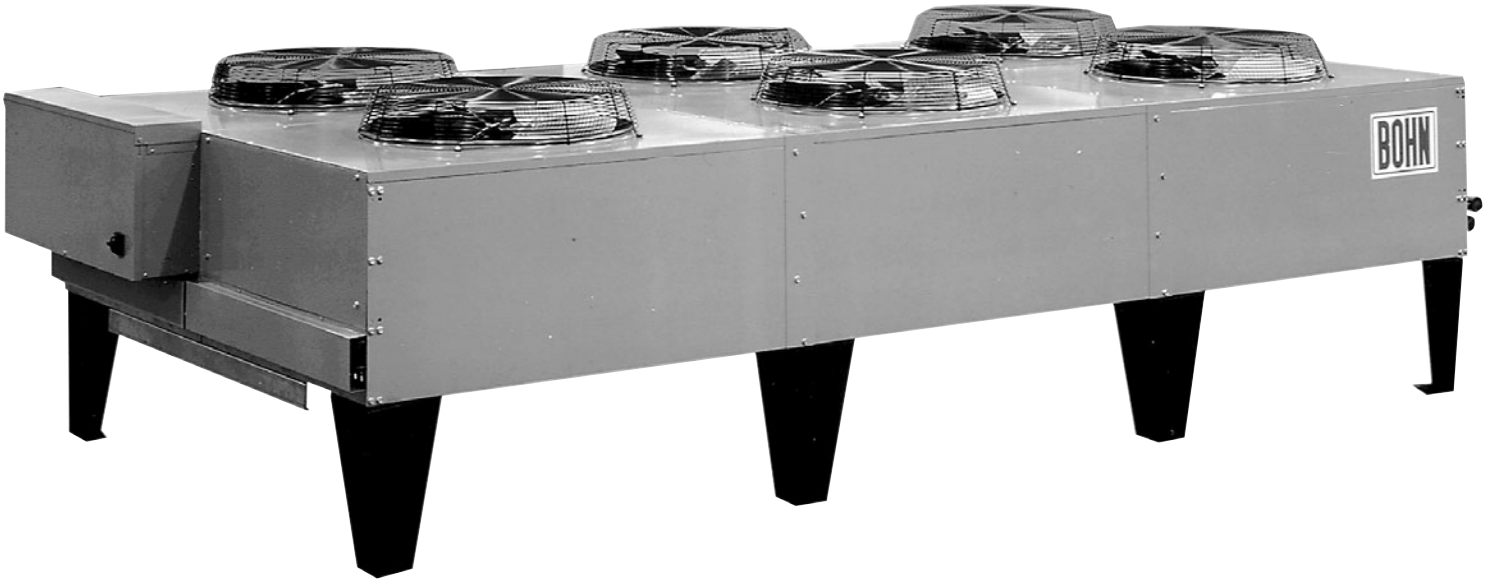

BR Series
Air Cooled Condensers

Specification Data

Table of Contents

Since product improvement is a continuing effort at Heatcraft, we reserve the right to make changes in specifications without notice.

Bohn's Newest Direct Drive Condenser Series

The Bohn BR series of direct drive condensers are available in 141 models ranging from 21 to 212 nominal tons. The condensers are designed for outdoor application with housing available in aluminum finish or painted galvanized steel.

The condensers are available in 1140, 830 or 540 RPM fan motors in either single or double row of fans. Fan motors and blades have been selected for optimum performance at minimum noise levels.

Condenser coils are designed for optimum heat transfer and are designed to operate with the new generation of CFC-free refrigerants. Condenser coils incorporate the patented Floating Tube design which virtually eliminate the possibility of tube sheet leaks.

Our engineers have designed the condenser for ease of installation and dependable operation. Extensive testing of the condenser insures long and trouble-free service life.

The condenser design incorporates the features most desired in air cooled condensers. An extensive list of options and fan cycle control panels complement the condenser design and allow the condenser to match the most rigid application requirements.

Condenser Features

- Complete range of capacities with 141 models ranging from 21 to 212 nominal tons.
- Modular design with models in both single and dual row of fan configurations.
- Direct drive fan motors in 1140, 830 or 540 RPM.
- Two styles of housings available. Aluminum housing or painted galvanized steel for attractive appearance. Both enclosures provide corrosion protection for outdoor applications.
- Patented floating tube coil designed to eliminate tube sheet leaks. (U.S. Patent No. 5,158,134)
- High efficiency condenser coil designed for optimum performance. Condenser coils are copper tubes with corrugated aluminum fins.
- High efficiency three phase fan motors with ball bearings and internal overload protection (Models BRH and BRL).
- Internal baffles provided between all fan cells.
- PVC coated steel fan guards.

Fan motor securely mounted to channel rail.

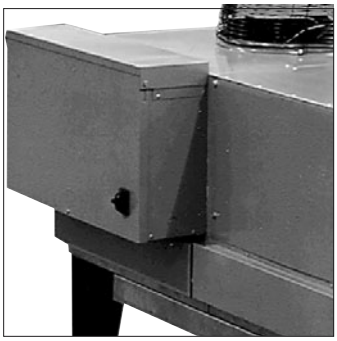

Weatherproof control panel protects wiring.

- Condensers up to 4 fans in length use 3/8 diameter tube to minimize refrigerant charge. Five and six fan (1 row of fans) and 10 and 12 fans (2 rows of fans) use 1/2 diameter tube to minimize refrigerant pressure drop.
- Weatherproof control panel with factory mounted door interrupt disconnect switch.
- UL and UL listed for Canada.

Available Options

- Multi-circuiting at no additional charge.
- All condensers available with 8, 10, or 12 fins per inch spacing.
- Alternate coil construction including Bohnguard SM coated fins, epoxy or phenolic coated fins and copper fins.
- Fan cycle control panels.
- Variable speed fan motor and controls.
- Side access doors to facilitate coil cleaning.
- Hinged fan panels.
- Outlet gravity dampers.
- Extended condenser legs for increased ground clearance.
- Sealtite wiring.

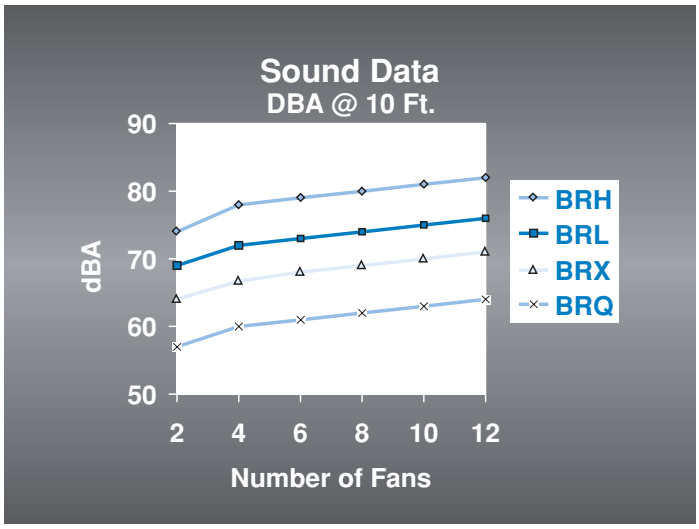

Additional Motor Combinations

Two new fan motor / blade combinations have been added to the BR line of air cooled condensers. These are designated as BRX and BRQ units.

BRX Models

1 hp, 830 rpm fan motors with wide paddle fan blades. This motor blade combination provides significant noise reduction and reduced fan motor watts.

BRQ Models

1/2 hp, 540 rpm fan motors with wide paddle fan blades. This fan motor and blade combination provides the ultimate in quiet operation with the lowest fan motor watts. Specify BRQ models for the optimum in energy efficiency or when noise is a consideration.

Features

Ease of Installation

The condensers are designed to reduce the cost and time required for installation. All lifting brackets are factory installed, and the legs are designed for quick installations. Fan motors are factory wired to a control panel providing a single point for field wiring. A wide variety of fan cycling control panels can be factory mounted and wired to the condenser, eliminating the need for a field mounted built-up control panel.

Lifting lugs are factory mounted for easy rigging and installation.

Dynamic Stress Testing

Fan motor and blade assemblies have undergone dynamic stress testing. This testing measures the stress levels and frequency of vibration of the fan during actual operation of the condenser. This type of testing insures a design with low vibration levels and long, trouble-free service life of the air moving assembly.

Bohn condensers have been thoroughly tested to guarantee high performance.

Condenser Housing

Condenser housings are designed for attractive appearance and corrosion protection. Cabinets are available in painted galvanized steel or economical mil finish aluminum. Painted units are grey with contrasting black angular legs.

Condensers have a unique internal frame design consisting of heavy gauge galvanized steel tube sheets and motor rails. Fan motors are bolted to motor rail for increased reliability and reduced noise and vibration.

Full width fan baffles are provided to increase unit rigidity and prevent windmilling during fan cycling.

Condenser Coils

Condensers use high efficiency coils with corrugated aluminum fins bonded to staggered copper tubes. Condenser coils are designed to operate with the new generation of environmentally safe refrigerants.

Patented design floating tubes dramatically reduce tube sheet leaks.

Floating Tube

All condensers use the *Patented Floating Tube Design* (U.S. Patent No. 5,158,134) to eliminate refrigerant leaks at the tube sheets. Additional tubes are added to the condenser coil. These tubes are expanded into the aluminum fins and condenser tube sheets. These anchor tubes support the weight of the coil, but are not a part of the refrigerant circuit.

The tubes in the refrigerant circuit are expanded into the fins, but *"float"* through oversized holes in the tube sheets. Tube sheet leaks are virtually eliminated, since the tubes which carry refrigerant never come in contact with the tube sheet.

Fan Motors

Condenser fan motors are high efficiency, three phase motors (models BRH and BRL) designed for outdoor condenser applications. Motors have thermal overload protection and permanently lubricated ball bearings. Separate fan motors are designed for either 1140, 830 or 540 RPM applications. All motors are factory wired to a condenser control panel to provide a single point for field wiring. Fan motors are suitable for 50 hertz application. 575/3/60 motors are available for Canadian applications (except BRQ).

Fan Blades

Direct drive fan blades are designed to pull air through the condenser coil to insure uniform air distribution over the entire coil. Fan blades have been selected and laboratory tested for optimum performance and minimum noise at each operating speed. Fan blades are heavy gauge aluminum, riveted to a painted steel spider.

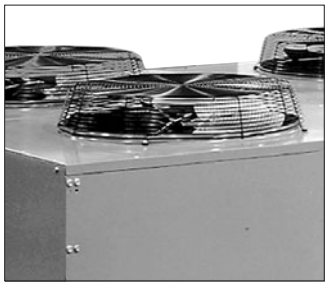

PVC coated steel wire fan guards provide maximum corrosion protection.

Fan Guards

Fan guards are PVC coated steel for maximum corrosion protection. Fan guards have extended height to increase the distance from the fan blade to the guard, reducing the noise level of the condenser.

Alternate Fin Spacing

Condenser fin spacing (FPI) has been selected to provide the optimum performance for each model. Many applications of condensers are in a high dust or dirt area. These applications may require a wider fin spacing to prevent the coils from being blocked. In most cases 8 or 10 fins per inch will be sufficient. Please note, when fins per inch are fixed, some catalog units will have identical capacities.

Condenser Selection

Capacity for air cooled condensers are based on Total Heat of Rejection (THR) at the condenser. Total heat of rejection is equal to net refrigeration at the evaporator (compressor capacity) plus the energy input into the refrigerant by the compressor (heat of compression). The heat of compression will vary depending on the compressor manufacturer, type of compressor and the operating conditions of the compressor. Whenever possible, it is recommended that you obtain the heat of compression value from the compressor manufacturer.

If this is not available, the THR can be estimated using the following formula:

THR = (Compressor Capacity) * (Heat of Compression Factor, Tables 1 & 2)

Table 1 contains heat of compression factors for suction cooled compressors and Table 2 contains factors for open drive compressors. For refrigeration systems beyond the range of Tables 1 and 2, use the following equations to estimate THR:

Open Compressors:

THR = Compressor Capacity (BTUH) + (2545) * (Break Horsepower, BHP)

Suction Cooled Compressors:

THR = Compressor Capacity (BTUH) + (3413 * KW)

The compressor capacity is effected by its altitude. If the condenser location is above sea level, an additional correction is required to the THR, as follows:

THR (altitude) = THR * Altitude Correction Factor, Table 3

Selection Example

Compressor capacity: 350,000
Evaporator temperature: +25° F
Condensing temperature: 115° F
Ambient temperature 95° F
Refrigerant: R-22
Compressor type: Semi-hermetic, suction cooled
Condenser type: 1140 RPM, one row of fans
Condenser altitude: 1,000 feet

Step 1: Estimate Condenser THR

From Table 1 for suction cooled compressors, at +25° F suction and 115° F condensing temperature, select a heat of compressor factor of 1.335.

THR = Compressor Capacity * Heat of Compression Factor
= 350,000 * 1.335 = 467,250

Step 2: Correct for Altitude

From Table 3 obtain an altitude correction factor of 1.02 for 1,000 feet.

THR = THR (from step 1) * Altitude Correction Factor (design)
= 467,250 * 1.02
= 476,595

Step 3: Calculate Design Condenser T.D.

Design Condenser T.D. = Condensing Temp — Ambient Temp
= 115 - 95
= 20° T.D.

Step 4: Condenser Selection

Condenser capacities for condensers with one row of fans at 1140 RPM are located in Table 7. These capacities are given in MBH. Convert the THR calculated in step 2 to MBH by dividing by 1,000.

THR (MBH) = 476,595 ÷ 1,000
= 476.6

Locate the 20° T.D. column for R-22 refrigerant and read down until you locate a value equal to or just larger than 476.6. This value is 495. Read horizontally to the left to obtain a condenser model of BRH 049.

Step 5: Calculate Actual T.D. and Condensing Temperature

The actual condenser T.D. can be calculated by dividing the design THR by the condenser rating at 1° T.D. For the BRH 049 the rating at 1° T.D. is 24.73 MBH.

Actual T.D. = THR (Design) ÷ (Rating @ 1° T.D.)
= 476.6 ÷ 24.73
= 19.3°F T.D.

The actual condensing temperature is the actual T.D. plus the ambient temperature.

Actual Condensing Temperature = (Actual T.D.) + (Ambient)
= 19.3 + 95
= 114.3° F

Table 1. Heat of Compression Factor for Suction Cooled Compressors.

Suction Temp. °F	Condensing Temp. °F				
	90°	100°	110°	120°	130°
-40°	1.56	1.63	1.72	1.81	1.94
-30°	1.49	1.55	1.62	1.70	1.80
-20°	1.43	1.49	1.55	1.62	1.70
-10°	1.38	1.43	1.49	1.55	1.63
0°	1.34	1.38	1.43	1.49	1.56
5°	1.31	1.36	1.41	1.48	1.55
10°	1.29	1.34	1.39	1.44	1.52
15°	1.26	1.31	1.36	1.41	1.48
20°	1.24	1.28	1.33	1.38	1.44
25°	1.22	1.26	1.31	1.36	1.42
30°	1.20	1.24	1.28	1.33	1.39
40°	1.17	1.20	1.24	1.28	1.33
50°	1.13	1.16	1.20	1.24	1.28

Table 2. Heat of Compression Factor for Open Drive Compressors.

Evaporator Temp. °F	Condensing Temp. °F					
	90°	100°	110°	120°	130°	140°
-30°	1.37	1.42	1.47	—	—	—
-20°	1.33	1.37	1.42	1.47	—	—
-10°	1.28	1.32	1.37	1.42	1.47	—
0°	1.24	1.28	1.32	1.37	1.41	1.47
5°	1.23	1.26	1.30	1.35	1.39	1.45
10°	1.21	1.24	1.28	1.32	1.36	1.42
15°	1.19	1.22	1.26	1.30	1.34	1.40
20°	1.17	1.20	1.24	1.28	1.32	1.37
25°	1.16	1.19	1.22	1.26	1.30	1.35
30°	1.14	1.17	1.20	1.24	1.27	1.32
40°	1.12	1.15	1.17	1.20	1.23	1.28
50°	1.09	1.12	1.14	1.17	1.20	1.24

Table 3. Altitude Correction Factors.

Altitude	Correction Factor
0	1.00
1,000	1.02
2,000	1.05
3,000	1.07
4,000	1.10
5,000	1.12
6,000	1.15
7,000	1.17

Multi Circuiting Selection Procedure

The air cooled condensers are available with more than one refrigerant circuit. The condenser will be factory assembled with the condenser coil divided into individual refrigerant circuits, each sized for its own specific application. Each circuit is supplied with its own inlet and outlet connections, individually labeled.

Multi Circuit Condenser Selection

Given four suction cooled compressors with conditions shown in Table 4 below. The condenser shall have 830 RPM fan motors, with two rows of fans. The condenser location is at sea level and the design ambient is 95°F.

Selection Procedure

Step 1: Input customer data in Table 4 in columns 1, 2, 3, 4 and 5.

Step 2: From Table 1, select the heat of compression factor for suction cooled compressors and input into column #6.

Step 3: From Table 5 obtain the refrigerant capacity factor and input into column #7.

Step 4: Calculate the design T.D. for each circuit by subtracting the ambient temperature from the circuit design condensing temperature and input into column #8.

$$T.D. = \text{Design Condensing Temperature} - \text{Ambient Temperature}$$

Step 5: Calculate the design THR / °T.D. for each circuit. Multiply column #5 by column #6 to calculate the THR for each circuit. Divide the result by the refrigerant correction factor, column #7 to convert the capacities to a common refrigerant. Divide the result by the design T.D., column #8 to calculate the design THR / °T.D. and input into column #9.

$$\text{Design THR / °T.D.} = \frac{\text{Compressor Capacity (\#5)} * \text{Heat of Compressor Factor (\#6)}}{\text{Refrigerant Capacity Factor (\#7)} * \text{Design T.D. (\#8)}}$$

Example for circuit #1

$$\text{Design THR / °T.D.} = \frac{235{,}000 * 1.31}{1.0 \times 15}$$

$$= 20{,}523 \text{ BTUH / °T.D.}$$

Step 6: Add the design THR / °T.D. for each circuit in column #9, to get a total of 37,734 BTUH / °T.D. Divide this total by 1,000 to get 37.7 MBH / °T.D.

Step 7: From Table 12 for two rows of condenser fans with 830 RPM fan motors, locate the column for R-22 capacity at 1° T.D. Read down the column until you get to a capacity equal to or greater than 37.7 MBH / °T.D. This value is 38.13 which corresponds to a BRL 076. From Table 12 obtain the total number of feeds available as 42.

Table 4. Condenser Multi-Circuit Selection.

1	2	3	4	5	X	6	÷	7	÷	8	=	9	10	11	12
Circuit Name	Evap. Temp.°F	Design Cond. Temp.°F	Refrig. Type	Comp. Cap. BTUH	X	Heat of Compress. Factor	÷	Refrig. Cap. Factor	÷	Design Cond. T.D.	=	Design THR/°TD	No. of Feeds Per Circ.	Actual Cond. T.D.	Actual Cond. Temp. °F
1	+25	110	22	235,000	X	1.31	÷	1.0	÷	15	=	20,523	23	14.7	109.7
2	+20	110	134A	61,000	X	1.33	÷	0.95	÷	15	=	5,693	6	15.7	110.7
3	-10	105	22	31,000	X	1.46	÷	1.0	÷	10	=	4,526	5	10.0	105.0
4	-20	105	22	46,000	X	1.52	÷	1.0	÷	10	=	6,992	8	9.6	104.6
										TOTAL	=	37,734	42		
										37,734 / 1,000 = 37.7 MBH/°TD					

Step 8: Determine the number of feeds per circuit. Divide the design THR / °T.D. in column #9 by the total capacity required (37,734) and multiply this result by the number of circuits available, which is 42. Round this value to the nearest integer and place in column #10. Add the individual feeds per circuit to get a total number of feeds for the condenser. This total must equal the total number of feeds available for the condenser (42).

$$\text{Number of feeds/circuit} = \frac{\text{Design THR / °T.D.(\#9) * Number of Circuits Available (42)}}{\text{Total Capacity Required (37,734)}}$$

Step 9: Calculate actual condensing T.D., (ATD):

$$ATD = \frac{\text{Design T.D. (\#8) * Design THR/°T.D. (\#9) * Number of Feeds Available (42)}}{\text{Number Feeds / CIR (\#10) * Condenser Capacity / °T.D. (Step \#7) * 1,000}}$$

Example for Circuit #1

$$ATD = \frac{15 * 20{,}523 \times 42}{23 * 38.13 * 1{,}000} = 14.74$$

Input these T.D. values in column #11.

Step 10: Calculate the actual condensing temperature. Actual condensing temperature is equal to the actual condensing T.D., column #11 plus the design ambient (95°). Input these values in column #12.

If the actual condensing temperature for each circuit is too high, it may be necessary to adjust the number of feeds per circuit or to select the next larger condenser size and recalculate the number of feeds per circuit.

Table 5. Refrigerant Capacity Factor.

Refrigerant	Capacity Factor
R-22	1.0
R-134A	0.95
R-404A	0.98
R-502	0.98
R-507	0.98

BRH Condenser Dimensions

B
R
H

End Views

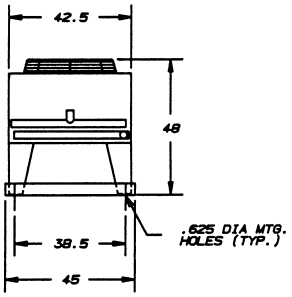

Side Views

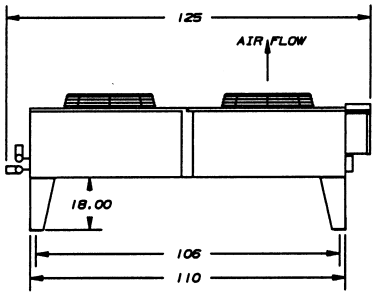

1 x 2
2 x 2

Single Row of Fans

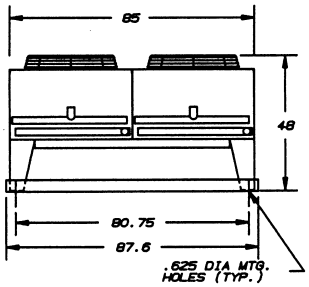

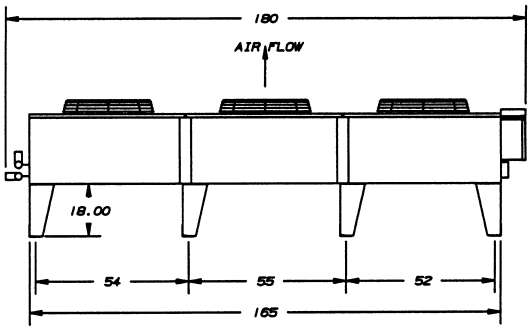

1 x 3
2 x 3

Double Row of Fans

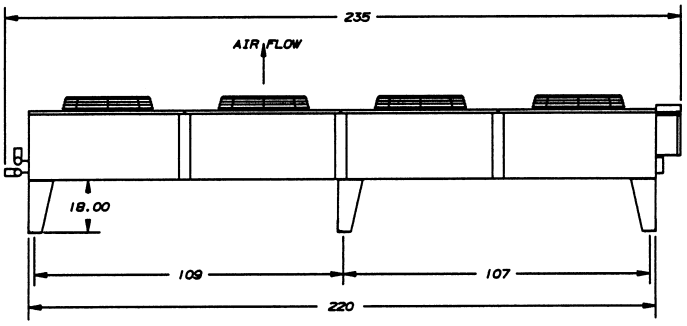

1 x 4
2 x 4

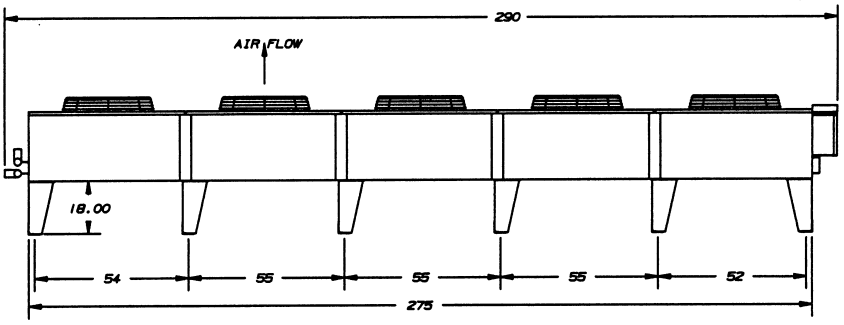

1 x 5
2 x 5

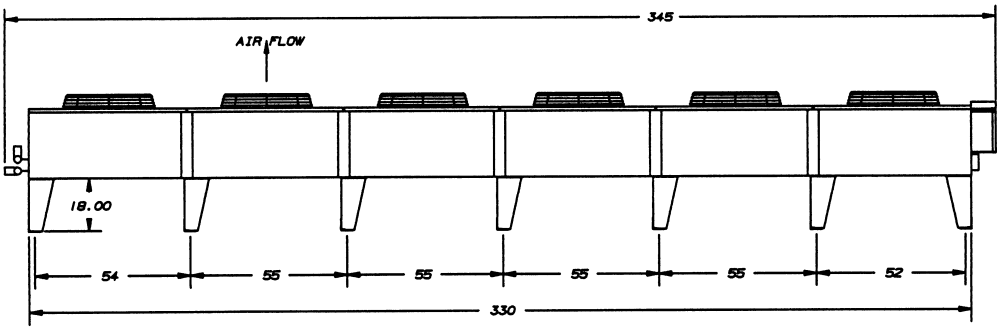

1 x 6
2 x 6

Table 6. Condenser Specifications for BRH models, 1140 RPM.

BRH Model	Fan Configuration	Number of Fans	CFM	FLA 208-230/3/60	FLA 460/3/60	FLA 575/3/60	Connections (In.) Inlet	Connections (In.) Outlet	Approx. Net Weight (Lbs.)
Single Row of Fans									
023	1 x 2	2	23,000	14.0	7.0	5.6	1 3/8	1 3/8	730
027	1 x 2	2	23,200	14.0	7.0	5.6	1 5/8	1 5/8	770
031	1 x 2	2	21,900	14.0	7.0	5.6	1 5/8	1 5/8	790
035	1 x 2	2	20,700	14.0	7.0	5.6	1 5/8	1 5/8	880
041	1 x 3	3	34,800	21.0	10.5	8.4	2 1/8	2 1/8	1190
045	1 x 3	3	32,900	21.0	10.5	8.4	2 1/8	2 1/8	1210
049	1 x 3	3	31,800	21.0	10.5	8.4	2 1/8	2 1/8	1240
053	1 x 4	4	46,400	28.0	14.0	11.2	2 1/8	2 1/8	1580
061	1 x 4	4	43,900	28.0	14.0	11.2	2 1/8	2 1/8	1620
065	1 x 4	4	42,400	28.0	14.0	11.2	2 1/8	2 1/8	1650
071	1 x 4	4	41,500	28.0	14.0	11.2	2 1/8	2 1/8	1760
075	1 x 5	5	54,900	35.0	17.5	14.0	2 1/8	2 1/8	2020
079	1 x 5	5	54,800	35.0	17.5	14.0	2 5/8	2 5/8	2000
089	1 x 5	5	51,800	35.0	17.5	14.0	2 5/8	2 5/8	2200
097	1 x 6	6	65,800	42.0	21.0	16.8	2 5/8	2 5/8	2390
107	1 x 6	6	62,200	42.0	21.0	16.8	2 5/8	2 5/8	2630
Double Row of Fans									
046	2 x 2	4	46,000	28.0	14.0	11.2	2 @ 1 3/8	2 @ 1 3/8	1540
054	2 x 2	4	46,400	28.0	14.0	11.2	2 @ 1 5/8	2 @ 1 5/8	1580
060	2 x 2	4	43.900	28.0	14.0	11.2	2 @ 1 5/8	2 @ 1 5/8	1620
066	2 x 2	4	42,400	28.0	14.0	11.2	2 @ 1 5/8	2 @ 1 5/8	1650
070	2 x 2	4	41,500	28.0	14.0	11.2	2 @ 1 5/8	2 @ 1 5/8	1760
080	2 x 3	6	69,700	42.0	21.0	16.8	2 @ 2 1/8	2 @ 2 1/8	2360
086	2 x 3	6	67,000	42.0	21.0	16.8	2 @ 2 1/8	2 @ 2 1/8	2380
090	2 x 3	6	65,800	42.0	21.0	16.8	2 @ 2 1/8	2 @ 2 1/8	2420
098	2 x 3	6	63,600	42.0	21.0	16.8	2 @ 2 1/8	2 @ 2 1/8	2480
106	2 x 4	8	92,900	56.0	28.0	22.4	2 @2 1/8	2 @ 2 1/8	3150
120	2 x 4	8	87,800	56.0	28.0	22.4	2 @ 2 1/8	2 @ 2 1/8	3230
132	2 x 4	8	84,800	56.0	28.0	22.4	2 @ 2 1/8	2 @ 2 1/8	3300
140	2 x 4	8	83,000	56.0	28.0	22.4	2 @ 2 1/8	2 @ 2 1/8	3570
152	2 x 5	10	109,700	70.0	35.0	28.0	2 @ 2 1/8	2 @ 2 1/8	4040
162	2 x 5	10	109,700	70.0	35.0	28.0	2 @ 2 5/8	2 @ 2 5/8	3990
168	2 x 5	10	106,000	70.0	35.0	28.0	2 @ 2 5/8	2 @ 2 5/8	4130
178	2 x 5	10	103,700	70.0	35.0	28.0	2 @ 2 5/8	2 @ 2 5/8	4390
194	2 x 6	12	131,600	84.0	42.0	33.6	2 @ 2 5/8	2 @ 2 5/8	4790
202	2 x 6	12	127,200	84.0	42.0	33.6	2 @ 2 5/8	2 @ 2 5/8	4960
212	2 x 6	12	124,400	84.0	42.0	33.6	2 @ 2 5/8	2 @ 2 5/8	5270

NOTES: 1. All fan blades are 30" diameter.
2. All motors are 1 1/2 HP, 208-230/460/3/60, 1140 RPM

B
R
H

BRH Standard Capacity

Table 7. BRH Condenser Capacity (1140 RPM).

BRH Model	Fan Config.	R-404A, R-502 and R-507 Total Heat of Rejection, MBH					* R-22 Total Heat of Rejection, MBH					Maximum No. of Circ. Avail.
		1°TD	10°TD	15°TD	20°TD	30°TD	1°TD	10°TD	15°TD	20°TD	30°TD	
Single Row of Fans												
023	1 x 2	11.07	111	166	221	332	11.30	113	170	226	339	14
027	1 x 2	13.00	130	195	260	390	13.27	133	199	265	398	14
031	1 x 2	14.60	146	219	292	438	14.90	149	224	298	447	14
035	1 x 2	17.14	172	257	343	515	17.50	175	263	350	525	14
041	1 x 3	19.53	195	293	391	586	19.93	199	299	399	598	21
045	1 x 3	21.89	219	328	438	657	22.33	223	335	447	670	21
049	1 x 3	24.24	242	364	485	727	24.73	247	371	495	742	28
053	1 x 4	26.04	260	391	521	781	26.57	266	399	531	797	21
061	1 x 4	29.20	292	438	584	876	29.80	298	447	596	894	21
065	1 x 4	32.34	323	485	647	970	33.00	330	495	660	990	28
071	1 x 4	34.30	343	515	686	1029	35.00	350	525	700	1050	28
075	1 x 5	36.95	369	554	739	1108	37.70	377	566	754	1131	21
079	1 x 5	39.36	394	590	787	1181	40.17	402	603	803	1205	28
089	1 x 5	43.48	435	652	870	1304	44.37	444	666	887	1331	28
097	1 x 6	47.24	472	709	945	1417	48.20	482	723	964	1446	28
107	1 x 6	52.14	521	782	1043	1564	53.20	532	798	1064	1596	28
Double Row of Fans												
046	2 x 2	22.15	221	332	443	664	22.60	226	339	452	678	2 @ 14
054	2 x 2	26.04	260	391	521	781	26.57	266	399	531	797	2 @ 14
060	2 x 2	29.20	292	438	584	876	29.80	298	447	596	894	2 @ 14
066	2 x 2	32.34	323	485	647	970	33.00	330	495	660	990	2 @ 14
070	2 x 2	34.30	343	515	686	1029	35.00	350	525	700	1050	2 @ 14
080	2 x 3	39.04	390	586	781	1171	39.83	398	598	797	1195	2 @ 21
086	2 x 3	41.81	418	627	836	1254	42.67	427	640	853	1280	2 @ 21
090	2 x 3	43.77	438	657	875	1313	44.67	447	670	893	1340	2 @ 21
098	2 x 3	48.48	485	727	970	1454	49.47	495	742	989	1484	2 @ 28
106	2 x 4	52.07	521	781	1041	1562	53.13	531	797	1063	1594	2 @ 21
120	2 x 4	58.38	584	876	1168	1751	59.57	596	894	1191	1787	2 @ 21
132	2 x 4	64.65	646	970	1293	1939	65.97	660	990	1319	1979	2 @ 28
140	2 x 4	68.60	686	1029	1372	2058	70.00	700	1050	1400	2100	2 @ 28
152	2 x 5	73.86	739	1108	1477	2216	75.37	754	1131	1507	2261	2 @ 21
162	2 x 5	78.73	787	1181	1575	2362	80.33	803	1205	1607	2410	2 @ 28
168	2 x 5	82.39	824	1236	1648	2472	84.07	841	1261	1681	2522	2 @ 28
178	2 x 5	86.93	869	1304	1739	2608	88.70	887	1331	1774	2661	2 @ 28
194	2 x 6	94.47	945	1417	1889	2834	96.40	964	1446	1928	2892	2 @ 28
202	2 x 6	98.85	988	1483	1977	2965	100.87	1009	1513	2017	3026	2 @ 28
212	2 x 6	104.30	1043	1565	2086	3129	106.43	1064	1597	2129	3193	2 @ 28

** For R-134A capacity, multiply R-22 capacity by 0.95; for 50 HZ capacity multiply by 0.92.*

BRH 12 Fins Per Inch Capacity

Table 8. BRH Condenser Capacity, 1140 RPM motors, 12 Fins Per Inch.

BRH Model	Fan Configuration	R-404A, R-502, & R-507 Total Heat of Rejection, MBH					R-22 Total Heat of Rejection, MBH				
		1°TD	10°TD	15°TD	20°TD	30°TD	1°TD	10°TD	15°TD	20°TD	30°TD
Single Row of Fans											
023	1 x 2	10.46	105	157	209	314	10.67	107	160	213	320
027 031	1 x 2	13.95	139	209	279	418	14.23	142	213	285	427
035	1 x 2	16.17	162	243	323	485	16.50	165	248	330	495
041 045	1 x 3	20.91	209	314	418	627	21.34	213	320	427	640
* 049	1 x 3	24.25	242	364	485	727	24.74	247	371	495	742
053 061	1 x 4	27.88	279	418	558	836	28.45	285	427	569	854
* 065 071	1 x 4	32.33	323	485	647	970	32.99	330	495	660	990
075	1 x 5	35.12	351	527	702	1054	35.84	358	538	717	1075
079 089	1 x 5	41.20	412	618	824	1236	42.04	420	631	841	1261
097 107	1 x 6	49.43	494	741	989	1483	50.44	504	757	1009	1513
Double Row of Fans											
046	2 x 2	20.90	209	314	418	627	21.33	213	320	427	640
054 060	2 x 2	27.90	279	419	558	837	28.47	285	427	569	854
* 066 070	2 x 2	32.34	323	485	647	970	33.00	330	495	660	990
080 * 086 090	2 x 3	41.82	418	627	836	1254	42.67	427	640	853	1280
* 098	2 x 3	48.48	485	727	970	1454	49.47	495	742	989	1484
106 120	2 x 4	55.76	558	836	1115	1673	56.90	569	854	1138	1707
* 132 140	2 x 4	64.65	647	970	1293	1940	65.97	660	990	1319	1979
152	2 x 5	70.24	702	1054	1405	2107	71.67	717	1075	1433	2150
162 * 168 178	2 x 5	82.39	824	1236	1648	2472	84.07	841	1261	1681	2522
194 * 202 212	2 x 6	98.85	989	1483	1977	2966	100.87	1009	1513	2017	3026

NOTE: For R-134A capacity, multiply R-22 capacity by 0.95; for 50 HZ capacity multiply by 0.92.
** Denotes models with 12 Fins Per Inch as standard.*

B
R
H

BRH 10 Fins Per Inch Capacity

Table 9. BRH Condenser Capacity, 1140 RPM motors, 10 Fins Per Inch.

BRH Model	Fan Configuration	R-404A, R-502 & R-507 Total Heat of Rejection, MBH					R-22 Total Heat of Rejection, MBH				
		1° TD	10° TD	15° TD	20° TD	30° TD	1° TD	10° TD	15° TD	20° TD	30° TD
Single Row of Fans											
023	1 x 2	9.57	96	144	191	287	9.77	98	147	195	293
* 027 031	1 x 2	13.00	130	195	260	390	13.27	133	199	265	398
035	1 x 2	15.29	153	229	306	459	15.60	156	234	312	468
* 041 045	1 x 3	19.53	195	293	391	586	19.93	199	299	399	598
049	1 x 3	22.96	230	344	459	689	23.43	234	352	469	703
* 053 061	1 x 4	26.04	260	391	521	781	26.57	266	399	531	797
065 071	1 x 4	30.61	306	459	612	918	31.23	312	469	625	937
075	1 x 5	33.19	332	498	664	996	33.87	339	508	677	1016
* 079 089	1 x 5	39.36	394	590	787	1181	40.17	402	603	803	1205
* 097 107	1 x 6	47.24	472	709	945	1417	48.20	482	723	964	1446
Double Row of Fans											
046	2 x 2	19.14	191	287	383	574	19.53	195	293	391	586
* 054 060	2 x 2	26.04	260	391	521	781	26.57	266	399	531	797
066 070	2 x 2	30.61	306	459	612	918	31.23	312	469	625	937
* 080 086 090	2 x 3	39.04	390	586	781	1171	39.83	398	598	797	1195
098	2 x 3	45.90	459	688	918	1377	46.83	468	703	937	1405
* 106 120	2 x 4	52.07	521	781	1041	1562	53.13	531	797	1063	1594
132 140	2 x 4	61.22	612	918	1224	1837	62.47	625	937	1249	1874
152	2 x 5	66.35	663	995	1327	1990	67.70	677	1016	1354	2031
* 162 168 178	2 x 5	78.73	787	1181	1575	2362	80.33	803	1205	1607	2410
* 194 202 212	2 x 6	94.47	945	1417	1889	2834	96.40	964	1446	1928	2892

NOTES: For R-134A capacity, multiply R-22 capacity by 0.95; for 50 HZ capacity multiply by 0.92.
** Denotes models with 10 fins per inch as standard.*

BRH 8 Fins Per Inch Capacity

Table 10. BRH Condenser Capacity, 1140 RPM motors, 8 Fins Per Inch.

BRH Model	Fan Configuration	R-404A, R-502 & R-507 Total Heat of Rejection, MBH					R-22 Total Heat of Rejection, MBH				
		1° TD	10° TD	15° TD	20° TD	30° TD	1° TD	10° TD	15° TD	20° TD	30° TD
Single Row of Fans											
023	1 x 2	8.59	86	129	172	258	8.77	88	132	175	263
027 031	1 x 2	11.73	117	176	235	352	11.97	120	180	239	359
035	1 x 2	14.01	140	210	280	420	14.30	143	215	286	429
041 045	1 x 3	17.61	176	264	352	528	17.97	180	270	359	539
049	1 x 3	21.04	210	316	421	631	21.47	215	322	429	644
053 061	1 x 4	23.45	235	352	469	704	23.93	239	359	479	718
065 071	1 x 4	28.06	281	421	561	842	28.63	286	430	573	859
075	1 x 5	30.02	300	450	600	901	30.63	306	460	613	919
079 089	1 x 5	36.26	363	544	725	1088	37.00	370	555	740	1110
097 107	1 x 6	43.51	435	653	870	1305	44.40	444	666	888	1332
Double Row of Fans											
046	2 x 2	17.18	172	258	344	515	17.53	175	263	351	526
054 060	2 x 2	23.45	235	352	469	704	23.93	239	359	479	718
066 070	2 x 2	28.06	281	421	561	842	28.63	286	430	573	859
080 086 090	2 x 3	35.21	352	528	704	1056	35.93	359	539	719	1078
098	2 x 3	42.07	421	631	841	1262	42.93	429	644	859	1288
106 120	2 x 4	46.94	469	704	939	1408	47.90	479	719	958	1437
132 140	2 x 4	56.12	561	842	1122	1684	57.27	573	859	1145	1718
152	2 x 5	60.01	600	900	1200	1800	61.23	612	919	1225	1837
162 168 178	2 x 5	72.49	725	1087	1450	2175	73.97	740	1110	1479	2219
194 202 212	2 x 6	86.99	870	1305	1740	2610	88.77	888	1332	1775	2663

NOTE: For R-134A capacity, multiply R-22 capacity by 0.95; for 50 HZ capacity multiply by 0.92.

BRL Condenser Dimensions

B
R
L

End Views

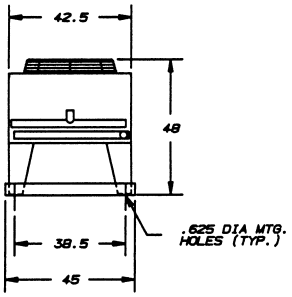

Side Views

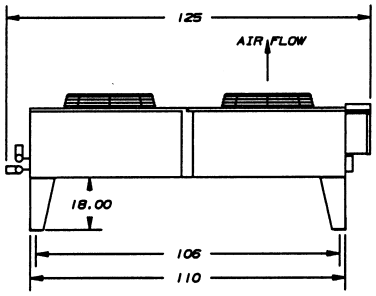

1 x 2
2 x 2

Single Row of Fans

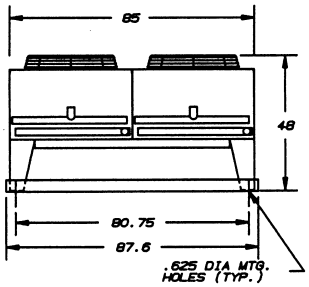

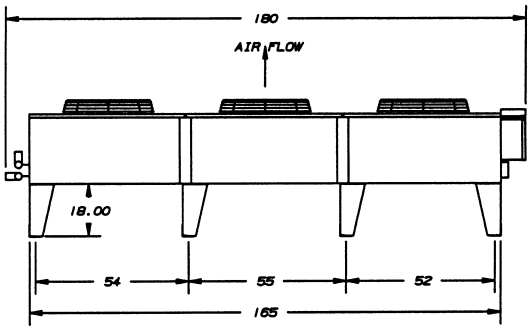

1 x 3
2 x 3

Double Row of Fans

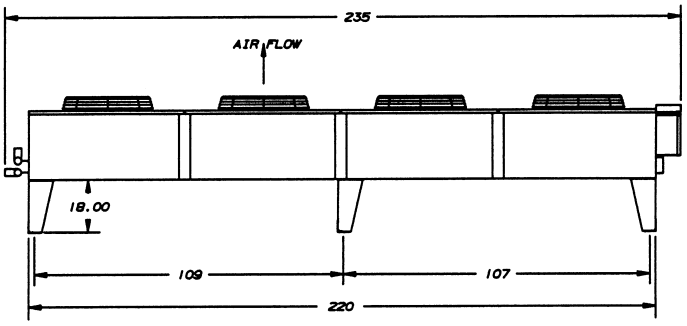

1 x 4
2 x 4

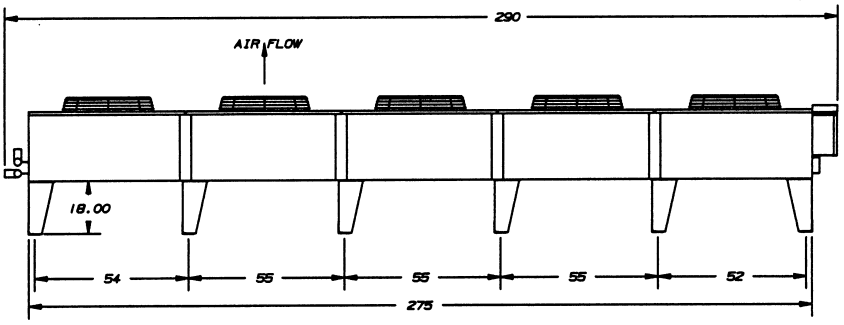

1 x 5
2 x 5

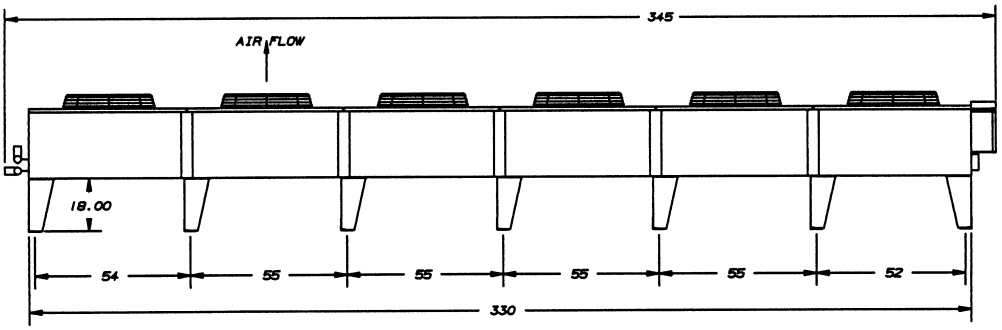

1 x 6
2 x 6

Table 11. Condenser Specifications for BRL models, 830 RPM.

BRL Model	Fan Configuration	Number of Fans	CFM	FLA			Connections (In.)		Approx. Net Weight (Lbs.)
				208-230/3/60	460/3/60	575/3/60	Inlet	Outlet	
Single Row of Fans									
021	1 x 2	2	20,500	13.2	6.6	5.2	1 3/8	1 3/8	770
025	1 x 2	2	20,900	13.2	6.6	5.2	1 5/8	1 5/8	790
027	1 x 2	2	20,100	13.2	6.6	5.2	1 5/8	1 5/8	790
029	1 x 2	2	19,600	13.2	6.6	5.2	1 5/8	1 5/8	800
033	1 x 2	2	17,900	13.2	6.6	5.2	1 5/8	1 5/8	880
037	1 x 3	3	31,300	19.8	9.9	7.8	2 1/8	2 1/8	1180
043	1 x 3	3	29,300	19.8	9.9	7.8	2 1/8	2 1/8	1210
047	1 x 3	3	28,400	19.8	9.9	7.8	2 1/8	2 1/8	1240
051	1 x 4	4	41,800	26.4	13.2	10.4	2 1/8	2 1/8	1580
055	1 x 4	4	40,200	26.4	13.2	10.4	2 1/8	2 1/8	1590
059	1 x 4	4	39,200	26.4	13.2	10.4	2 1/8	2 1/8	1600
063	1 x 4	4	35,800	26.4	13.2	10.4	2 1/8	2 1/8	1760
067	1 x 5	5	50,200	33.0	16.5	13.0	2 1/8	2 1/8	1990
077	1 x 5	5	49,000	33.0	16.5	13.0	2 5/8	2 5/8	2000
081	1 x 5	5	44,800	33.0	16.5	13.0	2 5/8	2 5/8	2200
091	1 x 6	6	58,800	39.6	19.8	15.6	2 5/8	2 5/8	2390
099	1 x 6	6	53,700	39.6	19.8	15.6	2 5/8	2 5/8	2630
Double Row of Fans									
042	2 x 2	4	40,900	26.4	13.2	10.4	2 @ 1 3/8	2 @ 1 3/8	1540
052	2 x 2	4	41,800	26.4	13.2	10.4	2 @ 1 5/8	2 @ 1 5/8	1580
056	2 x 2	4	40,200	26.4	13.2	10.4	2 @ 1 5/8	2 @ 1 5/8	1590
060	2 x 2	4	39,200	26.4	13.2	10.4	2 @ 1 5/8	2 @ 1 5/8	1600
064	2 x 2	4	35,800	26.4	13.2	10.4	2 @ 1 5/8	2 @ 1 5/8	1760
076	2 x 3	6	62,700	39.6	19.8	15.6	2 @ 2 1/8	2 @ 2 1/8	2360
086	2 x 3	6	58,700	39.6	19.8	15.6	2 @ 2 1/8	2 @ 2 1/8	2420
092	2 x 3	6	56,800	39.6	19.8	15.6	2 @ 2 1/8	2 @ 2 1/8	2480
102	2 x 4	8	83,600	52.8	26.4	20.8	2 @ 2 1/8	2 @ 2 1/8	3150
110	2 x 4	8	80,300	52.8	26.4	20.8	2 @ 2 1/8	2 @ 2 1/8	3180
118	2 x 4	8	78,400	52.8	26.4	20.8	2 @ 2 1/8	2 @ 2 1/8	3190
128	2 x 4	8	71,700	52.8	26.4	20.8	2 @ 2 1/8	2 @ 2 1/8	3510
136	2 x 5	10	100,400	66.0	33.0	26.0	2 @ 2 1/8	2 @ 2 1/8	3970
154	2 x 5	10	97,900	66.0	33.0	26.0	2 @ 2 5/8	2 @ 2 5/8	3990
164	2 x 5	10	89,600	66.0	33.0	26.0	2 @ 2 5/8	2 @ 2 5/8	4390
182	2 x 6	12	117,500	79.2	39.6	31.2	2 @ 2 5/8	2 @ 2 5/8	4790
190	2 x 6	12	113,500	79.2	39.6	31.2	2 @ 2 5/8	2 @ 2 5/8	4960
196	2 x 6	12	107,500	79.2	39.6	31.2	2 @ 2 5/8	2 @ 2 5/8	5270

NOTES: 1. *All fan blades are 30" diameter.*
2. *All motors are 1 1/2 HP, 208-230/460/3/60, 830 RPM.*

BRL Standard Capacity

B
R
L

Table 12. BRL Condenser Capacity (830 RPM).

BRL Model	Fan Config.	R-404A, R-502 and R-507 Total Heat of Rejection, MBH					* R-22 Total Heat of Rejection, MBH					Maximum No. of Circ. Avail.
		1°TD	10°TD	15°TD	20°TD	30°TD	1°TD	10°TD	15°TD	20°TD	30°TD	
Single Row of Fans												
021	1 x 2	10.45	105	157	209	314	10.67	107	160	213	320	14
025	1 x 2	12.45	124	187	249	373	12.70	127	191	254	381	14
027	1 x 2	13.30	133	199	266	399	13.57	136	204	271	407	14
029	1 x 2	14.44	144	217	289	433	14.73	147	221	295	442	14
033	1 x 2	15.75	157	236	315	472	16.07	161	241	321	482	14
037	1 x 3	18.69	187	280	374	561	19.07	191	286	381	572	21
043	1 x 3	20.97	210	315	419	629	21.40	214	321	428	642	21
047	1 x 3	22.54	225	338	451	676	23.00	230	345	460	690	28
051	1 x 4	24.89	249	373	498	747	25.40	254	381	508	762	21
055	1 x 4	26.59	266	399	532	798	27.13	271	407	543	814	21
059	1 x 4	28.91	289	434	578	867	29.50	295	443	590	885	28
063	1 x 4	31.49	315	472	630	945	32.13	321	482	643	964	28
067	1 x 5	33.45	335	502	669	1004	34.13	341	512	683	1024	21
077	1 x 5	37.21	372	558	744	1116	37.97	380	570	759	1139	28
081	1 x 5	39.98	400	600	800	1200	40.80	408	612	816	1224	28
091	1 x 6	44.62	446	669	892	1339	45.53	455	683	911	1366	28
099	1 x 6	47.99	480	720	960	1440	48.97	490	735	979	1469	28
Double Row of Fans												
042	2 x 2	20.87	209	313	417	626	21.30	213	320	426	639	2 @ 14
052	2 x 2	24.89	249	373	498	747	25.40	254	381	508	762	2 @ 14
056	2 x 2	26.59	266	399	532	798	27.13	271	407	543	814	2 @ 14
060	2 x 2	28.91	289	434	578	867	29.50	295	443	590	885	2 @ 14
064	2 x 2	31.49	315	472	630	945	32.13	321	482	643	964	2 @ 14
076	2 x 3	37.37	374	561	747	1121	38.13	381	572	763	1144	2 @ 21
086	2 x 3	41.94	419	629	839	1258	42.80	428	642	856	1284	2 @ 21
092	2 x 3	45.08	451	676	902	1352	46.00	460	690	920	1380	2 @ 28
102	2 x 4	49.82	498	747	996	1495	50.83	508	763	1017	1525	2 @ 21
110	2 x 4	53.18	532	798	1064	1595	54.27	543	814	1085	1628	2 @ 21
118	2 x 4	57.82	578	867	1156	1735	59.00	590	885	1180	1770	2 @ 28
128	2 x 4	62.95	629	944	1259	1888	64.23	642	964	1285	1927	2 @ 28
136	2 x 5	66.87	669	1003	1337	2006	68.23	682	1024	1365	2047	2 @ 21
154	2 x 5	74.38	744	1116	1488	2231	75.90	759	1139	1518	2277	2 @ 28
164	2 x 5	79.97	800	1200	1599	2399	81.60	816	1224	1632	2448	2 @ 28
182	2 x 6	89.25	892	1339	1785	2677	91.07	911	1366	1821	2732	2 @ 28
190	2 x 6	93.10	931	1397	1862	2793	95.00	950	1425	1900	2850	2 @ 28
196	2 x 6	95.97	960	1440	1919	2879	97.93	979	1469	1959	2938	2 @ 28

** For R-134A capacity, multiply R-22 capacity by 0.95; for 50 HZ capacity multiply by 0.92.*

BRL 12 Fins Per Inch Capacity

Table 13. BRL Condenser Capacity, 830 RPM Motors, 12 Fins Per Inch.

BRL Model	Fan Configuration	R-404A, R-502, & R-507 Total Heat of Rejection, MBH					R-22 Total Heat of Rejection, MBH				
		1°TD	10°TD	15°TD	20°TD	30°TD	1°TD	10°TD	15°TD	20°TD	30°TD
Single Row of Fans											
021	1 x 2	9.83	98	147	197	295	10.03	100	150	201	301
025 * 027	1 x 2	13.30	133	199	266	399	13.57	136	204	271	407
029 033	1 x 2	15.02	150	225	300	451	15.33	153	230	307	460
037 043	1 x 3	19.92	199	299	398	598	20.33	203	305	407	610
* 047	1 x 3	22.54	225	338	451	676	23.00	230	345	460	690
051 * 055	1 x 4	26.59	266	399	532	798	27.13	271	407	543	814
059 063	1 x 4	30.06	301	451	601	902	30.67	307	460	613	920
* 067	1 x 5	33.45	334	502	669	1003	34.13	341	512	683	1024
077 081	1 x 5	38.81	388	582	776	1164	39.60	396	594	792	1188
091 099	1 x 6	46.58	466	699	932	1397	47.53	475	713	951	1426
Double Row of Fans											
042	2 x 2	19.66	197	295	393	590	20.06	201	301	401	602
052 * 056	2 x 2	26.60	266	399	532	798	27.14	271	407	543	814
060 064	2 x 2	30.05	300	451	601	901	30.66	307	460	613	920
076 086	2 x 3	39.85	398	598	797	1195	40.66	407	610	813	1220
* 092	2 x 3	45.08	451	676	902	1352	46.00	460	690	920	1380
102 * 110	2 x 4	53.17	532	798	1063	1595	54.26	543	814	1085	1628
118 128	2 x 4	60.11	601	902	1202	1803	61.34	613	920	1227	1840
* 136	2 x 5	66.87	669	1003	1337	2006	68.23	682	1024	1365	2047
154 164	2 x 5	77.62	776	1164	1552	2328	79.20	792	1188	1584	2376
182 * 190 196	2 x 6	93.10	931	1397	1862	2793	95.00	950	1425	1900	2850

NOTE: For R-134A capacity, multiply R-22 capacity by 0.95; for 50 HZ capacity multiply by 0.92.
**Denotes models with 12 Fins Per Inch as standard.*

BRL 10 Fins Per Inch Capacity

Table 14. BRL Condenser Capacity, 830 RPM motors, 10 Fins Per Inch.

BRL Model	Fan Configuration	R-404A, R-502 & R-507 Total Heat of Rejection, MBH					R-22 Total Heat of Rejection, MBH				
		1° TD	10° TD	15° TD	20° TD	30° TD	1° TD	10° TD	15° TD	20° TD	30° TD
Single Row of Fans											
021	1 x 2	9.05	90	136	181	271	9.23	92	139	185	277
* 025 027	1 x 2	12.45	124	187	249	373	12.70	127	191	254	381
* 029 033	1 x 2	14.44	144	217	289	433	14.73	147	221	295	442
* 037 043	1 x 3	18.69	187	280	374	561	19.07	191	286	381	572
047	1 x 3	21.69	217	325	434	651	22.13	221	332	443	664
* 051 055	1 x 4	24.89	249	373	498	747	25.40	254	381	508	762
* 059 063	1 x 4	28.91	289	434	578	867	29.50	295	443	590	885
067	1 x 5	31.72	317	476	634	952	32.37	324	486	647	971
* 077 081	1 x 5	37.21	372	558	744	1116	37.97	380	570	759	1139
* 091 099	1 x 6	44.66	447	670	893	1340	45.57	456	684	911	1366
Double Row of Fans											
042	2 x 2	18.10	181	271	362	543	18.47	185	277	369	554
* 052 056	2 x 2	24.89	249	373	498	747	25.40	254	381	508	762
060 064	2 x 2	28.91	289	434	578	867	29.50	295	443	590	885
* 076 086	2 x 3	37.37	374	561	747	1121	38.13	381	572	763	1144
092	2 x 3	43.35	433	650	867	1300	44.23	442	664	885	1327
* 102 110	2 x 4	49.82	498	747	996	1495	50.83	508	763	1017	1525
* 118 128	2 x 4	57.82	578	867	1156	1735	59.00	590	885	1180	1770
136	2 x 5	63.44	634	952	1269	1903	64.73	647	971	1295	1942
* 154 164	2 x 5	74.38	744	1116	1488	2231	75.90	759	1139	1518	2277
* 182 190 196	2 x 6	89.25	892	1339	1785	2677	91.07	911	1366	1821	2732

NOTES: For R-134A capacity, multiply R-22 capacity by 0.95; for 50 HZ capacity multiply by 0.92.
** Denotes models with 10 fins per inch as standard.*

BRL 8 Fins Per Inch Capacity

Table 15. BRL Condenser Capacity, 830 RPM motors, 8 Fins Per Inch.

BRL Model	Fan Configuration	R-404A, R-502 & R-507 Total Heat of Rejection, MBH					R-22 Total Heat of Rejection, MBH				
		1° TD	10° TD	15° TD	20° TD	30° TD	1° TD	10° TD	15° TD	20° TD	30° TD
Single Row of Fans											
021	1 x 2	8.10	81	122	162	243	8.27	83	124	165	248
025 027	1 x 2	11.30	113	170	226	339	11.53	115	173	231	346
029 033	1 x 2	13.43	134	201	269	403	13.70	137	206	274	411
037 043	1 x 3	16.95	170	254	339	509	17.30	173	260	346	519
047	1 x 3	20.12	201	302	402	604	20.53	205	308	411	616
051 055	1 x 4	22.61	226	339	452	678	23.07	231	346	461	692
059 063	1 x 4	26.85	269	403	537	806	27.40	274	411	548	822
067	1 x 5	28.71	287	431	574	861	29.30	293	440	586	879
077 081	1 x 5	34.40	344	516	688	1032	35.10	351	527	702	1053
091 099	1 x 6	41.29	413	619	826	1239	42.13	421	632	843	1264
Double Row of Fans											
042	2 x 2	16.20	162	243	324	486	16.53	165	248	331	496
052 056	2 x 2	22.61	226	339	452	678	23.07	231	346	461	692
060 064	2 x 2	26.85	269	403	537	806	27.40	274	411	548	822
076 086	2 x 3	33.94	339	509	679	1018	34.63	346	520	693	1039
092	2 x 3	40.25	402	604	805	1207	41.07	411	616	821	1232
102 110	2 x 4	45.24	452	679	905	1357	46.17	462	693	923	1385
118 128	2 x 4	53.67	537	805	1073	1610	54.77	548	822	1095	1643
136	2 x 5	57.40	574	861	1148	1722	58.57	586	879	1171	1757
154 164	2 x 5	68.76	688	1031	1375	2063	70.17	702	1053	1403	2105
182 190 196	2 x 6	82.52	825	1238	1650	2475	84.20	842	1263	1684	2526

NOTE: For R-134A capacity, multiply R-22 capacity by 0.95; for 50 HZ capacity multiply by 0.92.

BRX Condenser Dimensions

B
R
X

End Views

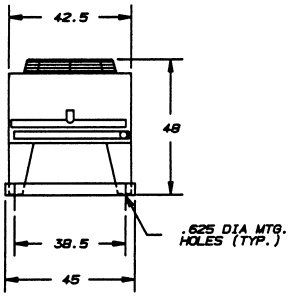

Side Views

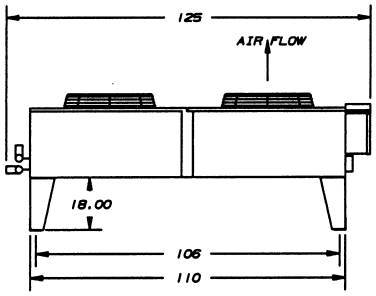

1 x 2
2 x 2

Single Row of Fans

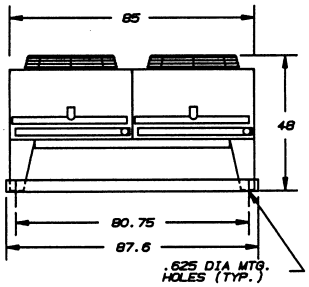

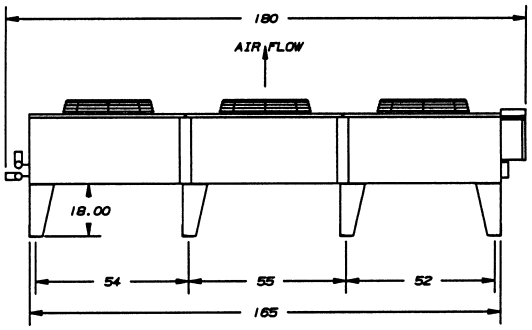

1 x 3
2 x 3

Double Row of Fans

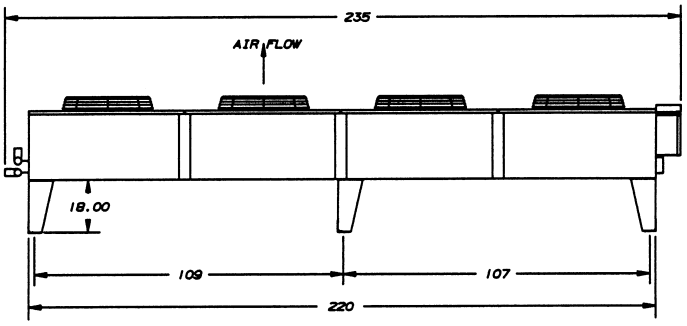

1 x 4
2 x 4

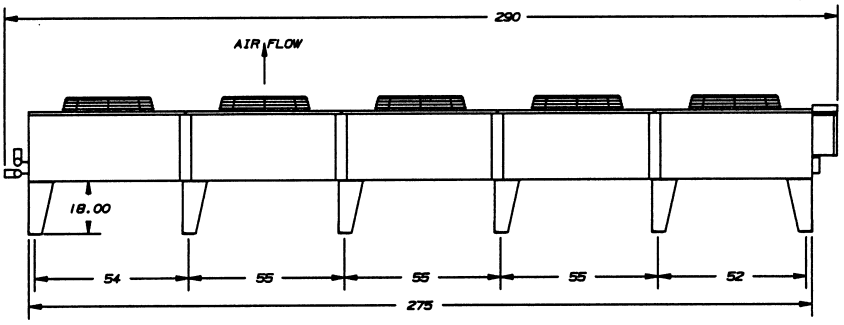

1 x 5
2 x 5

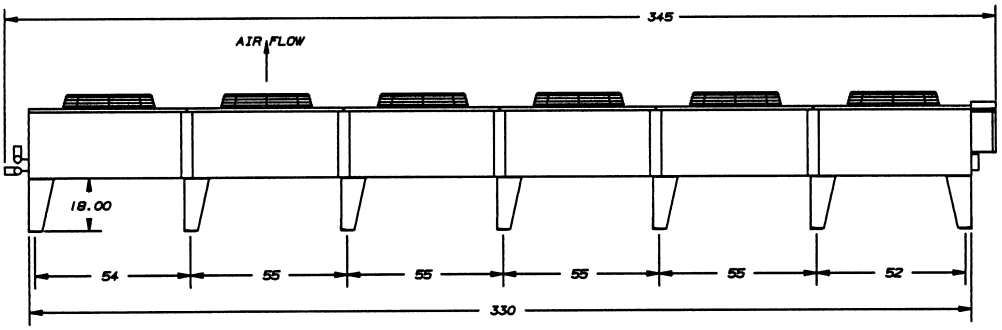

1 x 6
2 x 6

Table 16. Condenser Specifications for BRX Models (830 RPM, 1 HP Motors)

BRX Model	Fan Configuration	Number of Fans	CFM	FLA			Connections (In.)		Approx. Net Wt. (Lbs.)
				208-230/3/60	460/3/60	575/3/60	Inlet	Outlet	
Single Row of Fans									
021	1 x 2	2	18,400	9.6	4.8	4.0	1 3/8	1 3/8	770
025	1 x 2	2	18,700	9.6	4.8	4.0	1 5/8	1 5/8	790
027	1 x 2	2	18,100	9.6	4.8	4.0	1 5/8	1 5/8	790
029	1 x 2	2	17,800	9.6	4.8	4.0	1 5/8	1 5/8	800
033	1 x 2	2	16,500	9.6	4.8	4.0	1 5/8	1 5/8	880
037	1 x 3	3	28,000	14.4	7.2	6.0	2 1/8	2 1/8	1180
043	1 x 3	3	26,600	14.4	7.2	6.0	2 1/8	2 1/8	1210
047	1 x 3	3	25,900	14.4	7.2	6.0	2 1/8	2 1/8	1240
051	1 x 4	4	37,400	19.2	9.6	8.0	2 1/8	2 1/8	1580
055	1 x 4	4	36,200	19.2	9.6	8.0	2 1/8	2 1/8	1590
059	1 x 4	4	35,500	19.2	9.6	8.0	2 1/8	2 1/8	1600
063	1 x 4	4	33,100	19.2	9.6	8.0	2 1/8	2 1/8	1760
067	1 x 5	5	45,200	24.0	12.0	10.0	2 1/8	2 1/8	1990
077	1 x 5	5	44,400	24.0	12.0	10.0	2 5/8	2 5/8	2000
081	1 x 5	5	41,300	24.0	12.0	10.0	2 5/8	2 5/8	2200
091	1 x 6	6	53,300	28.8	14.4	12.0	2 5/8	2 5/8	2390
099	1 x 6	6	49,600	28.8	14.4	12.0	2 5/8	2 5/8	2630
Double Row of Fans									
042	2 x 2	4	36,700	19.2	9.6	8.0	2 @ 1 3/8	2 @ 1 3/8	1540
052	2 x 2	4	37,400	19.2	9.6	8.0	2 @ 1 5/8	2 @ 1 5/8	1580
056	2 x 2	4	36,200	19.2	9.6	8.0	2 @ 1 5/8	2 @ 1 5/8	1590
060	2 x 2	4	35,500	19.2	9.6	8.0	2 @ 1 5/8	2 @ 1 5/8	1600
064	2 x 2	4	33,100	19.2	9.6	8.0	2 @ 1 5/8	2 @ 1 5/8	1760
076	2 x 3	6	56,000	28.8	14.4	12.0	2 @ 2 1/8	2 @ 2 1/8	2360
086	2 x 3	6	53,200	28.8	14.4	12.0	2 @ 2 1/8	2 @ 2 1/8	2420
092	2 x 3	6	51,800	28.8	14.4	12.0	2 @ 2 1/8	2 @ 2 1/8	2480
102	2 x 4	8	74,700	38.4	19.2	16.0	2 @ 2 1/8	2 @ 2 1/8	3150
110	2 x 4	8	72,400	38.4	19.2	16.0	2 @ 2 1/8	2 @ 2 1/8	3180
118	2 x 4	8	71,000	38.4	19.2	16.0	2 @ 2 1/8	2 @ 2 1/8	3190
128	2 x 4	8	66,200	38.4	19.2	16.0	2 @ 2 1/8	2 @ 2 1/8	3510
136	2 x 5	10	90,500	48.0	24.0	20.0	2 @ 2 1/8	2 @ 2 1/8	3970
154	2 x 5	10	88,800	48.0	24.0	20.0	2 @ 2 5/8	2 @ 2 5/8	3990
164	2 x 5	10	82,700	48.0	24.0	20.0	2 @ 2 5/8	2 @ 2 5/8	4390
182	2 x 6	12	106,600	57.6	28.8	24.0	2 @ 2 5/8	2 @ 2 5/8	4790
190	2 x 6	12	103,200	57.6	28.8	24.0	2 @ 2 5/8	2 @ 2 5/8	4960
196	2 x 6	12	99,200	57.6	28.8	24.0	2 @ 2 5/8	2 @ 2 5/8	5270

NOTES: 1. *All fan blades are 30" diameter.*
2. *All motors are 1 HP, 208-230/460/3/60, 830 RPM.*

BRX Standard Capacity

Table 17. BRX Condenser Capacities, 830 RPM, 1 HP Motors

BRX Model	Fan Config.	R-404A, R-502 & R-507 Total Heat of Rejection, MBH					R-22 Total Heat of Rejection, MBH					Minimum No. of Circ. Avail.
		1° TD	10° TD	15° TD	20° TD	30° TD	1° TD	10° TD	15° TD	20° TD	30° TD	
Single Row of Fans												
021	1 x 2	10.06	101	151	201	302	10.27	103	154	205	308	14
025	1 x 2	11.73	117	176	235	352	11.97	120	180	239	359	14
027	1 x 2	12.38	124	186	248	371	12.63	126	190	253	379	14
029	1 x 2	13.52	135	203	270	406	13.80	138	207	276	414	14
033	1 x 2	14.34	143	215	287	430	14.63	146	220	293	439	14
037	1 x 3	17.61	176	264	352	528	17.97	180	270	359	539	21
043	1 x 3	19.53	195	293	391	586	19.93	199	299	399	598	21
047	1 x 3	21.00	210	315	420	630	21.43	214	322	429	643	28
051	1 x 4	23.49	235	352	470	705	23.97	240	360	479	719	21
055	1 x 4	24.76	248	371	495	743	25.27	253	379	505	758	21
059	1 x 4	27.08	271	406	542	812	27.63	276	415	553	829	28
063	1 x 4	28.65	286	430	573	859	29.23	292	439	585	877	28
067	1 x 5	30.97	310	465	619	929	31.60	316	474	632	948	21
077	1 x 5	33.84	338	508	677	1015	34.53	345	518	691	1036	28
081	1 x 5	35.84	358	538	717	1075	36.57	366	549	731	1097	28
091	1 x 6	40.64	406	610	813	1219	41.47	415	622	839	1244	28
099	1 x 6	42.99	430	645	860	1290	43.87	439	658	877	1316	28
Double Row of Fans												
042	2 x 2	20.12	201	302	402	604	20.53	205	308	411	616	2 @ 14
052	2 x 2	23.49	235	352	470	705	23.96	240	360	479	719	2 @ 14
056	2 x 2	24.76	248	371	495	743	25.28	253	379	505	758	2 @ 14
060	2 x 2	27.08	271	406	542	812	27.64	276	415	553	829	2 @ 14
064	2 x 2	28.65	286	430	573	859	29.24	292	439	585	877	2 @ 14
076	2 x 3	35.21	352	528	704	1056	35.94	359	539	719	1078	2 @ 21
086	2 x 3	39.07	391	586	781	1172	39.88	399	598	797	1196	2 @ 21
092	2 x 3	42.04	420	631	841	1261	42.90	429	644	858	1287	2 @ 28
102	2 x 4	46.97	470	705	939	1409	47.92	479	719	959	1438	2 @ 21
110	2 x 4	49.56	496	743	991	1487	50.56	506	759	1011	1517	2 @ 21
118	2 x 4	54.16	542	812	1083	1625	55.28	553	829	1105	1658	2 @ 28
128	2 x 4	57.30	573	859	1146	1719	58.48	585	877	1169	1754	2 @ 28
136	2 x 5	61.94	619	929	1239	1858	63.20	632	948	1264	1896	2 @ 21
154	2 x 5	67.72	677	1016	1354	2032	69.10	691	1037	1382	2073	2 @ 28
164	2 x 5	71.64	716	1075	1433	2149	73.10	731	1097	1462	2193	2 @ 28
182	2 x 6	81.27	813	1219	1625	2438	82.92	829	1244	1659	2488	2 @ 28
190	2 x 6	84.08	841	1261	1682	2523	85.80	858	1287	1716	2574	2 @ 28
196	2 x 6	85.98	860	1290	1720	2579	87.72	877	1316	1755	2632	2 @ 28

NOTE: For R-134A capacity, multiply R-22 capacity by 0.95; for 50 HZ capacity multiply by 0.92.

BRX 12 Fins Per Inch Capacity

Table 18. BRX Condenser Capacities, 12 Fins Per Inch, 830 RPM, 1 HP Motors

BRX Model	Fan Config.	R-404A, R-502 & R-507 Total Heat of Rejection, MBH					R-22 Total Heat of Rejection, MBH					Minimum No. of Circ. Avail.
		1° TD	10° TD	15° TD	20° TD	30° TD	1° TD	10° TD	15° TD	20° TD	30° TD	
Single Row of Fans												
021	1 x 2	9.50	95	142	190	285	9.69	97	145	194	291	14
025 * 027	1 x 2	12.38	124	186	248	371	12.63	126	189	253	379	14
029 033	1 x 2	14.01	140	210	280	420	14.30	143	215	286	429	14
037 043	1 x 3	18.58	186	279	372	557	18.96	190	284	379	569	21
* 047	1 x 3	21.00	210	315	420	630	21.43	214	321	429	643	28
051 * 055	1 x 4	24.76	248	371	495	743	25.27	253	379	505	758	21
059 063	1 x 4	28.03	280	420	561	841	28.60	286	429	572	858	28
* 067	1 x 5	30.97	310	465	619	929	31.60	316	474	632	948	21
077 081	1 x 5	35.04	350	526	701	1051	35.75	358	536	715	1073	28
091 099	1 x 6	42.04	420	631	841	1261	42.90	429	644	858	1287	28
Double Row of Fans												
042	2 x 2	19.00	190	285	380	570	19.39	194	291	388	582	2 @ 14
052 * 056	2 x 2	24.77	248	372	495	743	25.28	253	379	506	758	2 @ 14
060 064	2 x 2	28.03	280	420	561	841	28.60	286	429	572	858	2 @ 14
076 086	2 x 3	37.16	372	557	743	1115	37.92	379	569	758	1138	2 @ 21
* 092	2 x 3	42.04	420	631	841	1261	42.90	429	644	858	1287	2 @ 28
102 * 110	2 x 4	49.55	495	743	991	1486	50.56	506	758	1011	1517	2 @ 21
118 128	2 x 4	56.06	561	841	1121	1682	57.20	572	858	1144	1716	2 @ 28
* 136	2 x 5	61.94	619	929	1239	1858	63.20	632	948	1264	1896	2 @ 21
154 164	2 x 5	70.07	701	1051	1401	2102	71.50	715	1073	1430	2145	2 @ 28
182 * 190 196	2 x 6	84.08	841	1261	1682	2523	85.80	858	1287	1716	2574	2 @ 28

NOTE: For R-134A capacity, multiply R-22 capacity by 0.95; for 50 HZ capacity multiply by 0.92. For R-134A capacity, multiply R-22 capacity by 0.95; for 50 HZ capacity multiply by 0.92.

**Denotes models with 12 Fins Per Inch as standard.*

BRX 10 Fins Per Inch Capacity

Table 19. BRX Condenser Capacities, 10 Fins Per Inch, 830 RPM, 1 HP Motors

BRX Model	Fan Config.	R-404A, R-502 & R-507 Total Heat of Rejection, MBH					R-22 Total Heat of Rejection, MBH					Minimum No. of Circ. Avail.
		1° TD	10° TD	15° TD	20° TD	30° TD	1° TD	10° TD	15° TD	20° TD	30° TD	
Single Row of Fans												
021	1 x 2	8.77	88	132	175	263	8.95	90	134	179	269	14
* 025 027	1 x 2	11.73	117	176	235	352	11.97	120	180	239	359	14
* 029 033	1 x 2	13.52	135	203	270	406	13.80	138	207	276	414	14
* 037 043	1 x 3	17.61	176	264	352	528	17.97	180	270	359	539	21
047	1 x 3	20.32	203	305	406	609	20.73	207	311	415	622	28
* 051 055	1 x 4	23.49	235	352	470	705	23.97	240	360	479	719	21
* 059 063	1 x 4	27.08	271	406	542	812	27.63	276	414	553	829	28
067	1 x 5	29.35	294	440	587	881	29.95	300	449	599	899	21
* 077 081	1 x 5	33.84	338	508	677	1015	34.53	345	518	691	1036	28
* 091 099	1 x 6	40.64	406	610	813	1219	41.47	415	622	829	1244	28
Double Row of Fans												
042	2 x 2	17.53	175	263	351	526	17.89	179	268	358	537	2 @ 14
* 052 056	2 x 2	23.48	235	352	470	704	23.96	240	359	479	719	2 @ 14
* 060 064	2 x 2	27.09	271	406	542	813	27.64	276	415	553	829	2 @ 14
* 076 086	2 x 3	35.22	352	528	704	1057	35.94	359	539	719	1078	2 @ 21
092	2 x 3	40.63	406	609	813	1219	41.46	415	622	829	1244	2 @ 28
* 102 110	2 x 4	46.96	470	704	939	1409	47.92	479	719	958	958	2 @ 21
* 118 128	2 x 4	54.17	542	813	1083	1625	55.28	553	829	1106	1658	2 @ 28
136	2 x 5	58.70	587	881	1174	1761	59.90	599	899	1198	1797	2 @ 21
* 154 164	2 x 5	67.72	677	1016	1354	2032	69.10	691	1037	1382	2073	2 @ 28
* 182 190 196	2 x 6	81.26	813	1219	1625	2438	82.92	829	1244	1658	2488	2 @ 28

NOTES: For R-134A capacity, multiply R-22 capacity by 0.95; for 50 HZ capacity multiply by 0.92.
** Denotes models with 10 fins per inch as standard.*

BRX 8 Fins Per Inch Capacity

Table 20. BRX Condenser Capacities, 8 Fins Per Inch, 830 RPM, 1 HP Motors

BRX Model	Fan Config.	R-404A, R-502 & R-507 Total Heat of Rejection, MBH					R-22 Total Heat of Rejection, MBH					Minimum No. of Circ. Avail.
		1° TD	10° TD	15° TD	20° TD	30° TD	1° TD	10° TD	15° TD	20° TD	30° TD	
Single Row of Fans												
021	1 x 2	7.84	78	118	157	235	8.00	80	120	160	240	14
025 027	1 x 2	10.76	108	161	215	323	10.98	110	165	220	329	14
029 033	1 x 2	12.50	125	187	250	375	12.75	128	191	255	383	14
037 043	1 x 3	16.14	161	242	323	484	16.47	165	247	329	494	21
047	1 x 3	18.75	187	281	375	562	19.13	191	287	383	574	28
051 055	1 x 4	21.52	215	323	430	646	21.96	220	329	439	659	21
059 063	1 x 4	25.00	250	375	500	750	25.51	255	383	510	765	28
067	1 x 5	26.90	269	404	538	807	27.45	275	412	549	824	21
077 081	1 x 5	31.24	312	469	625	937	31.88	319	478	638	956	28
091 099	1 x 6	37.49	375	562	750	1125	38.26	383	574	765	1148	28
Double Row of Fans												
042	2 x 2	15.68	157	235	314	470	16.00	160	240	320	480	2 @ 14
052 056	2 x 2	21.52	215	323	430	646	21.96	220	329	439	659	2 @ 14
060 064	2 x 2	25.00	250	375	500	750	25.51	255	383	510	765	2 @ 14
076 086	2 x 3	32.28	323	484	646	968	32.94	329	494	659	988	2 @ 21
092	2 x 3	37.49	375	562	750	1125	38.26	383	574	765	1148	2 @ 28
102 110	2 x 4	43.04	430	646	861	1291	43.92	439	659	878	1318	2 @ 21
118 128	2 x 4	49.99	500	750	1000	1500	51.01	510	765	1020	1530	2 @ 28
136	2 x 5	53.80	538	807	1076	1614	54.90	549	824	1098	1647	2 @ 21
154 164	2 x 5	62.49	625	937	1250	1875	63.77	638	957	1275	1913	2 @ 28
182 190 196	2 x 6	74.99	750	1125	1500	2250	76.52	765	1148	1530	2296	2 @ 28

NOTE: For R-134A capacity, multiply R-22 capacity by 0.95; for 50 HZ capacity multiply by 0.92.

B
R
Q

BRQ Condenser Dimensions

End Views

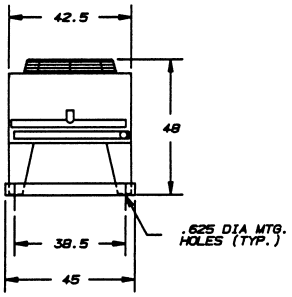

Side Views

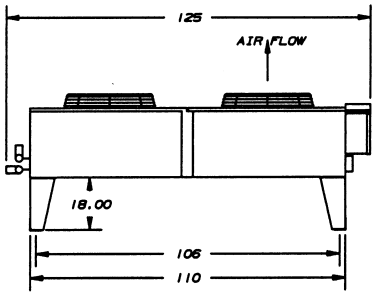

1 x 2
2 x 2

Single Row of Fans

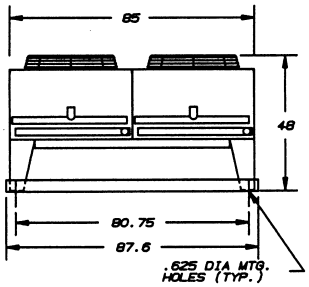

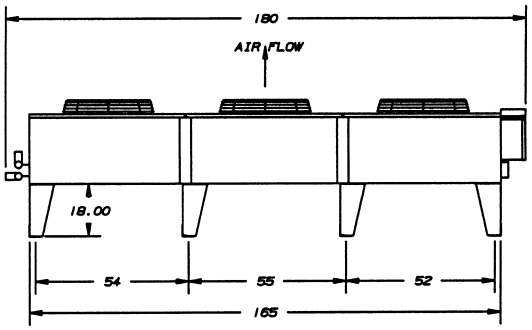

1 x 3
2 x 3

Double Row of Fans

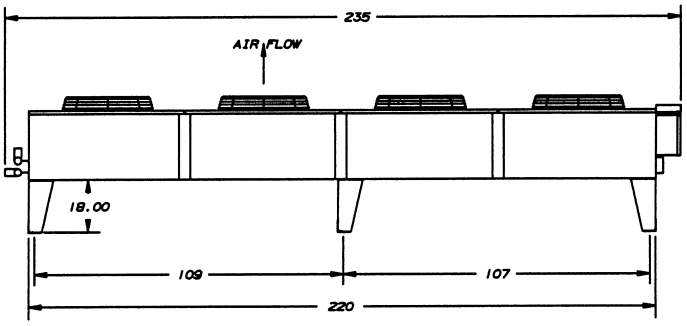

1 x 4
2 x 4

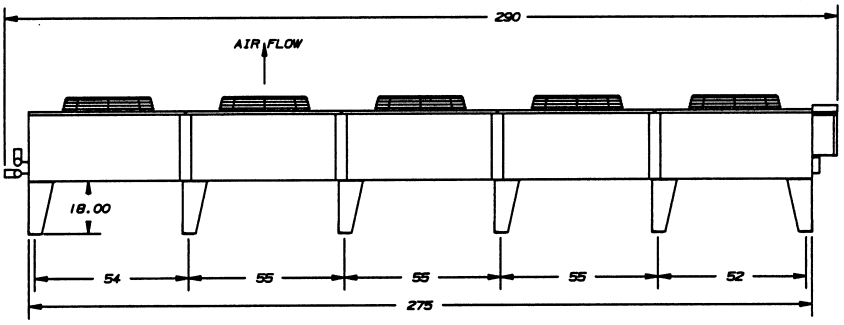

1 x 5
2 x 5

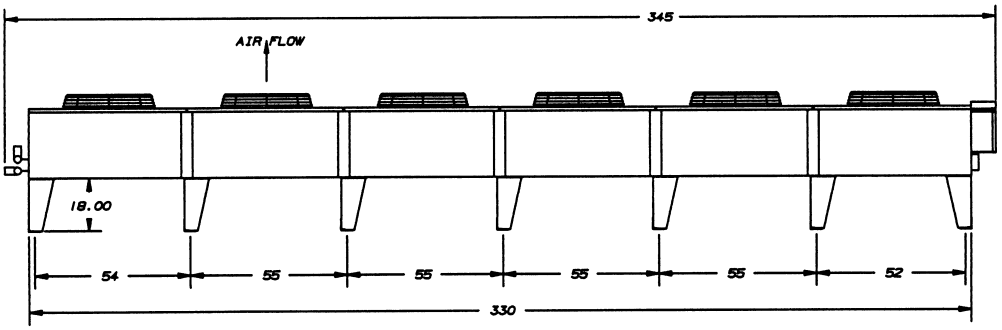

1 x 6
2 x 6

Table 21. Condenser Specifications for BRQ Models (540 RPM, 1/2 HP Motors)

BRQ Model	Fan Configuration	Number of Fans	CFM	FLA 208-230/3/60	FLA 460/3/60	Connections Inlet/Outlet	Fan Motor Watts	Sound Level DBA @ 10 Ft.	Approx. Net Weight (Lbs.)
Single Row of Fans									
021	1 x 2	2	12,100	7.0	3.5	1 3/8	780	57	770
025	1 x 2	2	12,300	7.0	3.5	1 3/8	780	57	790
027	1 x 2	2	11,900	7.0	3.5	1 3/8	780	57	790
029	1 x 2	2	11,700	7.0	3.5	1 5/8	860	57	800
033	1 x 2	2	10,900	7.0	3.5	1 5/8	860	57	880
037	1 x 3	3	18,500	10.6	5.3	1 5/8	1170	59	1180
043	1 x 3	3	17,600	10.6	5.3	1 5/8	1170	59	1210
047	1 x 3	3	17,100	10.6	5.3	1 5/8	1300	59	1240
051	1 x 4	4	24,600	14.1	7.0	2 1/8	1560	60	1580
055	1 x 4	4	23,900	14.1	7.0	2 1/8	1560	60	1590
059	1 x 4	4	23,400	14.1	7.0	2 1/8	1720	60	1600
063	1 x 4	4	21,800	14.1	7.0	2 1/8	1720	60	1760
067	1 x 5	5	29,900	17.6	8.8	2 1/8	1950	61	1990
077	1 x 5	5	29,300	17.6	8.8	2 1/8	2150	61	2000
081	1 x 5	5	27,300	17.6	8.8	2 1/8	2150	61	2200
091	1 x 6	6	35,200	21.1	10.6	2 1/8	2580	62	2390
099	1 x 6	6	32,800	21.1	10.6	2 1/8	2580	62	2630
Double Row of Fans									
042	2 x 2	4	24,200	14.1	7.0	2@1 3/8	1560	59	1540
052	2 x 2	4	24,600	14.1	7.0	2@1 3/8	1560	59	1580
056	2 x 2	4	23,900	14.1	7.0	2@1 3/8	1560	59	1590
060	2 x 2	4	23,400	14.1	7.0	2@1 5/8	1720	59	1600
064	2 x 2	4	21,800	14.1	7.0	2@1 5/8	1720	59	1760
076	2 x 3	6	37,000	21.1	10.6	2@1 5/8	2340	61	2360
086	2 x 3	6	35,100	21.1	10.6	2@1 5/8	2340	61	2420
092	2 x 3	6	34,200	21.1	10.6	2@1 5/8	2580	61	2480
102	2 x 4	8	49,300	28.2	14.1	2@2 1/8	3120	62	3150
110	2 x 4	8	47,800	28.2	14.1	2@2 1/8	3120	62	3180
118	2 x 4	8	46,900	28.2	14.1	2@2 1/8	3440	62	3190
128	2 x 4	8	43,700	28.2	14.1	2@2 1/8	3440	62	3510
136	2 x 5	10	59,700	35.2	17.6	2@2 1/8	3900	63	3970
154	2 x 5	10	58,600	35.2	17.6	2@2 1/8	4300	63	3990
164	2 x 5	10	54,600	35.2	17.6	2@2 1/8	4300	63	4390
182	2 x 6	12	70,300	42.2	21.1	2@2 1/8	5160	64	4790
190	2 x 6	12	68,400	42.2	21.1	2@2 1/8	5160	64	4960
196	2 x 6	12	65,500	42.2	21.1	2@2 1/8	5160	64	5270

NOTES:
1. *All fan blades are 30" diameter.*
2. *All motors are 1/2 HP, 208-230/460/3/60, 540 RPM.*
3. *Not available in 575/3/60 voltage.*

BRQ Standard Capacity

B R Q

Table 22. BRQ Condenser Capacities, 540 RPM, 1/2 HP Motors

BRQ Model	Fan Config.	R-404A & R-507 Total Heat of Rejection, MBH					R-22 Total Heat of Rejection, MBH					Maximum No. of Circ. Avail.
		1° TD	10° TD	15° TD	20° TD	30° TD	1° TD	10° TD	15° TD	20° TD	30° TD	
Single Row of Fans												
021	1 x 2	8.13	81	122	163	244	8.30	83	125	166	249	14
025	1 x 2	9.24	92	139	185	277	9.43	94	142	189	283	14
027	1 x 2	9.67	97	145	193	290	9.87	99	148	197	296	14
029	1 x 2	10.26	103	154	205	308	10.47	105	157	209	314	14
033	1 x 2	10.98	110	165	220	329	11.20	112	168	224	336	14
037	1 x 3	13.92	139	209	278	417	14.20	142	213	284	426	21
043	1 x 3	15.12	151	227	302	454	15.43	154	232	309	463	21
047	1 x 3	15.97	160	240	319	479	16.30	163	245	326	489	28
051	1 x 4	18.52	185	278	370	556	18.90	189	284	378	567	21
055	1 x 4	19.34	193	290	387	580	19.73	197	296	395	592	21
059	1 x 4	20.48	205	307	410	614	20.90	209	314	418	627	28
063	1 x 4	21.95	220	329	439	659	22.40	224	336	448	672	28
067	1 x 5	24.14	241	362	483	724	24.63	246	370	493	739	21
077	1 x 5	25.61	256	384	512	768	26.13	261	392	523	784	28
081	1 x 5	27.44	274	412	549	823	28.00	280	420	560	840	28
091	1 x 6	30.74	307	461	615	922	31.37	314	471	627	941	28
099	1 x 6	32.93	329	494	659	988	33.60	336	504	672	1008	28
Double Row of Fans												
042	2 x 2	16.30	163	245	326	489	16.63	166	250	333	499	2 @ 14
052	2 x 2	18.52	185	278	370	556	18.90	189	284	378	567	2 @ 14
056	2 x 2	19.31	193	290	386	579	19.70	197	296	394	591	2 @ 14
060	2 x 2	20.48	205	307	410	614	20.90	209	314	418	627	2 @ 14
064	2 x 2	21.95	220	329	439	659	22.40	224	336	448	672	2 @ 14
076	2 x 3	27.77	278	417	555	833	28.33	283	425	567	850	2 @ 21
086	2 x 3	30.25	302	454	605	907	30.87	309	463	617	926	2 @ 21
092	2 x 3	31.95	319	479	639	958	32.60	326	489	652	978	2 @ 28
102	2 x 4	37.04	370	556	741	1111	37.80	378	567	756	1134	2 @ 21
110	2 x 4	38.64	386	580	773	1159	39.43	394	592	789	1183	2 @ 21
118	2 x 4	41.00	410	615	820	1230	41.83	418	628	837	1255	2 @ 28
128	2 x 4	43.87	439	658	877	1316	44.77	448	672	895	1343	2 @ 28
136	2 x 5	48.31	483	725	966	1449	49.30	493	740	986	1479	2 @ 21
154	2 x 5	51.25	513	769	1025	1538	52.30	523	785	1046	1569	2 @ 28
164	2 x 5	54.85	548	823	1097	1645	55.97	560	840	1119	1679	2 @ 28
182	2 x 6	61.48	615	922	1230	1844	62.73	627	941	1255	1882	2 @ 28
190	2 x 6	63.90	639	958	1278	1917	65.20	652	978	1304	1956	2 @ 28
196	2 x 6	65.82	658	987	1316	1975	67.17	672	1008	1343	2015	2 @ 28

NOTE: For R-134A capacity, multiply R-22 capacity by 0.95; for 50 HZ capacity multiply by 0.92.

BRQ 12 Fins Per Inch Capacity

Table 23. BRQ Condenser Capacities, 12 Fins Per Inch, 540 RPM, 1/2 HP Motors

BRQ Model	Fan Config.	R-404A & R-507 Total Heat of Rejection, MBH					R-22 Total Heat of Rejection, MBH					Maximum No. of Circ. Avail.
		1° TD	10° TD	15° TD	20° TD	30° TD	1° TD	10° TD	15° TD	20° TD	30° TD	
Single Row of Fans												
021	1 x 2	7.74	77	116	155	232	7.90	79	119	158	237	14
025 * 027	1 x 2	9.67	97	145	193	290	9.87	99	148	197	296	14
029 033	1 x 2	10.65	106	160	213	319	10.87	109	163	217	326	14
037 043	1 x 3	14.50	145	218	290	435	14.80	148	222	296	444	21
* 047	1 x 3	15.97	160	240	319	479	16.30	163	245	326	489	28
051 * 055	1 x 4	19.34	193	290	387	580	19.73	197	296	395	592	21
059 063	1 x 4	21.30	213	319	426	639	21.73	217	326	435	652	28
* 067	1 x 5	24.14	241	362	483	724	24.63	246	370	493	739	21
077 081	1 x 5	26.62	266	399	532	799	27.17	272	408	543	815	28
091 099	1 x 6	31.95	319	479	639	958	32.60	326	489	652	978	28
Double Row of Fans												
042	2 x 2	15.45	155	232	309	464	15.77	158	237	315	473	2 @ 14
052 * 056	2 x 2	19.31	193	290	386	579	19.70	197	296	394	591	2 @ 14
060 064	2 x 2	21.30	213	319	426	639	21.73	217	326	435	652	2 @ 14
076 086	2 x 3	29.01	290	435	580	870	29.60	296	444	592	888	2 @ 21
* 092	2 x 3	31.95	319	479	639	958	32.60	326	489	652	978	2 @ 28
102 * 110	2 x 4	38.64	386	580	773	1159	39.43	394	592	789	1183	2 @ 21
118 128	2 x 4	42.60	426	639	852	1278	43.47	435	652	869	1304	2 @ 28
* 136	2 x 5	48.31	483	725	966	1449	49.30	493	740	986	1479	2 @ 21
154 164	2 x 5	53.25	532	799	1065	1597	54.33	543	815	1087	1630	2 @ 28
182 * 190 196	2 x 6	63.90	639	958	1278	1917	65.20	652	978	1304	1956	2 @ 28

NOTE: For R-134A capacity, multiply R-22 capacity by 0.95; for 50 HZ capacity multiply by 0.92.
**Denotes models with 12 Fins Per Inch as standard.*

BRQ 10 Fins Per Inch Capacity

B
R
Q

Table 24. BRQ Condenser Capacities, 10 Fins Per Inch, 540 RPM, 1/2 HP Motors

BRQ Model	Fan Config.	R-404A & R-507 Total Heat of Rejection, MBH					R-22 Total Heat of Rejection, MBH					Maximum No. of Circ. Avail.
		1° TD	10° TD	15° TD	20° TD	30° TD	1° TD	10° TD	15° TD	20° TD	30° TD	
Single Row of Fans												
021	1 x 2	7.12	71	107	142	214	7.27	73	109	145	218	14
* 025 027	1 x 2	9.24	92	139	185	277	9.43	94	142	189	283	14
* 029 033	1 x 2	10.26	103	154	205	308	10.47	105	157	209	314	14
* 037 043	1 x 3	13.92	139	209	278	417	14.20	142	213	284	426	21
047	1 x 3	15.39	154	231	308	462	15.70	157	236	314	471	28
* 051 055	1 x 4	18.52	185	278	370	556	18.90	189	284	378	567	21
* 059 063	1 x 4	20.48	205	307	410	614	20.90	209	314	418	627	28
067	1 x 5	23.16	232	347	463	695	23.63	236	355	473	709	21
* 077 081	1 x 5	25.61	256	384	512	768	26.13	261	392	523	784	28
* 091 099	1 x 6	30.74	307	461	615	922	31.37	314	471	627	941	28
Double Row of Fans												
042	2 x 2	14.28	143	214	286	428	14.57	146	219	291	437	2 @ 14
* 052 056	2 x 2	18.52	185	278	370	556	18.90	189	284	378	567	2 @ 14
* 060 064	2 x 2	20.48	205	307	410	614	20.90	209	314	418	627	2 @ 14
* 076 086	2 x 3	27.77	278	417	555	833	28.33	283	425	567	850	2 @ 21
092	2 x 3	30.74	307	461	615	922	31.37	314	471	627	941	2 @ 28
* 102 110	2 x 4	37.04	370	556	741	1111	37.80	378	567	756	1134	2 @ 21
* 118 128	2 x 4	41.00	410	615	820	1230	41.83	418	628	837	1255	2 @ 28
136	2 x 5	46.32	463	695	926	1390	47.27	473	709	945	1418	2 @ 21
* 154 164	2 x 5	51.25	513	769	1025	1538	52.30	523	785	1046	1569	2 @ 28
* 182 190 196	2 x 6	61.48	615	922	1230	1844	62.73	627	941	1255	1882	2 @ 28

NOTES: For R-134A capacity, multiply R-22 capacity by 0.95; for 50 HZ capacity multiply by 0.92.
** Denotes models with 10 fins per inch as standard.*

BRQ 8 Fins Per Inch Capacity

Table 25. BRQ Condenser Capacities, 8 Fins Per Inch, 540 RPM, 1/2 HP Motors

BRQ Model	Fan Config.	R-404A & R-507 Total Heat of Rejection, MBH					R-22 Total Heat of Rejection, MBH					Maximum No. of Circ. Avail.
		1° TD	10° TD	15° TD	20° TD	30° TD	1° TD	10° TD	15° TD	20° TD	30° TD	
Single Row of Fans												
021	1 x 2	6.40	64	96	128	192	6.53	65	98	131	196	14
025 027	1 x 2	8.43	84	126	169	253	8.60	86	129	172	258	14
029 033	1 x 2	9.67	97	145	193	290	9.87	99	148	197	296	14
037 043	1 x 3	12.61	126	189	252	378	12.87	129	193	257	386	21
047	1 x 3	14.50	145	218	290	435	14.80	148	222	296	444	28
051 055	1 x 4	16.82	168	252	336	505	17.17	172	258	343	515	21
059 063	1 x 4	19.34	193	290	387	580	19.73	197	296	395	592	28
067	1 x 5	21.04	210	316	421	631	21.47	215	322	429	644	21
077 081	1 x 5	24.17	242	363	483	725	24.67	247	370	493	740	28
091 099	1 x 6	29.01	290	435	580	870	29.60	296	444	592	888	28
Double Row of Fans												
042	2 x 2	12.81	128	192	256	384	13.07	131	196	261	392	2 @ 14
052 056	2 x 2	16.82	168	252	336	505	17.17	172	258	343	515	2 @ 14
060 064	2 x 2	19.34	193	290	387	580	19.73	197	296	395	592	2 @ 14
076 086	2 x 3	25.22	252	378	504	757	25.73	257	386	515	772	2 @ 21
092	2 x 3	29.01	290	435	580	870	29.60	296	444	592	888	2 @ 28
102 110	2 x 4	33.65	336	505	673	1009	34.33	343	515	687	1030	2 @ 21
118 128	2 x 4	38.68	387	580	774	1160	39.47	395	592	789	1184	2 @ 28
136	2 x 5	42.07	421	631	841	1262	42.93	429	644	859	1288	2 @ 21
154 164	2 x 5	48.35	483	725	967	1450	49.33	493	740	987	1480	2 @ 28
182 190 196	2 x 6	58.02	580	870	1160	1740	59.20	592	888	1184	1776	2 @ 28

NOTE: For R-134A capacity, multiply R-22 capacity by 0.95; for 50 HZ capacity multiply by 0.92.

Fan Cycle Control Panels

Fan cycling panels are available to cycle fans on ambient temperature or condensing pressure or custom built control panels can be factory installed to interface with electronic refrigeration controllers.

- All fans are cycled with contactors.
- Condensers with a single row of fans cycle fans separately with one contactor per fan.
- Condensers with two rows of fans cycle fans in pairs, with one contactor for every pair of fans.
- Fans closest to the header end of the unit run continuously.
- Standard control circuit voltage is 230 volts. Control circuits with 24 or 115 volts are available on request.
- Control circuits are factory wired to a control circuit terminal board for convenient single point field wiring. Standard control circuits require an external power supply for powering control circuit (by others).
- A control circuit transformer is available on 460 volt condensers as a factory mounted option to provide power to the control circuit.

Ambient Fan Cycle

Condenser fans are controlled by ambient temperature using electronic temperature controls. Ambient fan cycling is recommended for multi-circuited condensers or single circuit condensers where there is little variation in condenser load.

Ambient fan cycling is limited in its ability to control head pressure to mild ambient conditions, see Table 26 for minimum ambients for fan cycling. Full year head pressure control can be obtained by combining ambient fan cycling with another means of head pressure control, such as condenser flooding controls or variable speed. Combining these controls with ambient fan cycling has the additional advantage of reducing the amount of refrigerant required to flood the condenser.

See Table 27 for typical settings for ambient thermostats.

Pressure Fan Cycling

Condenser fans are controlled by pressure switches which monitor condenser pressure. Pressure fan cycling is ideal for those condensers which see a significant change in condenser load. Since the controls sense condensing pressure, they can cycle fans at any ambient temperature, in response to a change in condensing pressure.

An additional pressure switch is available as an option to cycle the fan closest to the header end of the condenser. This option is only recommended for condensers with large variations in condenser load caused by heat reclaim, hot gas defrost or a high percentage of compressor unloading.

Table 26. Minimum Ambient for Fan Cycling.

Number of Fans		Design T.D.*				
Single Row	Double Row	30	25	20	15	10
2	4	35	45	55	60	70
3	6	15	30	40	55	65
4	8	0	15	30	45	60
5	10	0	10	20	35	55
6	12	0	0	10	30	50

**Based on maintaining 90° F minimum condensing temperature.*

Table 27. Fan Cycling Thermostat Settings.

Number of Fans		Design	Thermostat Setting				
Single Row	Double Rows	T.D.	1	2	3	4	5
2	4	30	60				
		25	65				
		20	70				
		15	75				
		10	80				
3	6	30	60	40			
		25	65	55			
		20	70	60			
		15	75	65			
		10	80	75			
4	8	30	60	50	30		
		25	65	55	40		
		20	70	65	50		
		15	75	70	60		
		10	80	75	70		
5	10	30	60	55	45	30	
		25	65	60	50	35	
		20	70	65	60	40	
		15	75	70	65	55	
		10	80	75	70	65	
6	12	30	55	50	40	30	25
		25	65	60	55	45	35
		20	70	65	60	50	40
		15	75	70	65	60	50
		10	80	75	70	65	60

Variable Speed

Condenser head pressure control is provided by varying the air flow through the condenser by changing the RPM of the condenser fan. This control package is offered in combination with ambient fan cycling. The fan motor next to the header end of the condenser is the variable speed fan. The remainder of the fans are constant speed and are cycled separately using ambient sensing thermostats. On condensers with two rows of fans, two variable speed fans are provided (one per unit) and the remainder of the fans are constant speed and are cycled in pairs.

The variable speed control package consists of a special variable speed motor (1140 RPM, single phase) and an electronic speed control which controls the speed of the motor in response to condensing pressure. Fan motor, speed control and all related components are all factory mounted and wired. Two speed controls are provided on units with two rows of fans to allow for separate control of each fan motor.

Splitting Controls

Additional head pressure can be provided by valving off a portion of the condenser circuit and removing that portion from the refrigeration circuit, or splitting the condenser. In addition to providing a means of head pressure control, this control will reduce the amount of refrigerant required to operate the condenser with a flooded head pressure control.

Condenser splitting is recommended as a seasonal adjustment controlled by ambient temperature. A pressure switch is also provided as a backup control to prevent high head pressures from occurring during heavy load conditions.

On condensers with a single row of fans the control package consists of an ambient sensing thermostat, a pressure switch sensing condensing pressure and a splitting relay. The splitting relay provides a set of dry contacts to control the valves required to split the condenser (valves supplied by others).

On condensers with double rows of fans, additional controls and contactors are provided to cycle all of the fans on the side of the condenser which has been split off.

Except as noted above, the splitting packages do not control fan cycling. It is recommended that fan cycling be controlled by combining the splitting package with pressure fan cycling.

Control Panels for Electronic Controllers

Custom control panels can often be fabricated to interface with many of the microprocessor based electronic refrigeration controls. These panels often include individual motor fusing, individual fan motor contactors, splitting relays and printed circuit boards to interface with the microprocessor control. Contact the factory with your specific requirements.

Condenser Refrigerant Charge

The normal summer operating charge for condensers is shown in Table 28. This charge can also be used in condensers with fan cycling kits, since added refrigerant is not required for mild weather control. Table 28 also contains the additional refrigerant charge required when using flooded style head pressure controls.

Combining fan cycling with flooded head pressure controls significantly reduces the amount of winter charge required to flood the condenser. Table 30 shows the refrigerant charge required when fan cycling is used in conjunction with a flooded style head pressure control.

Table 28. Refrigerant Charge, Lbs. R-22 for Flooded Condenser.

Model		Refrigerant R-22 Charge for Summer Operation, Lbs.	Additional Refrigerant R-22 Charge Required for Flooded Condenser Operation Lbs. for 20° T.D. °F Minimum Ambient at Condenser				
BRH	BRL/X/Q		+60	+40	+20	0	-20
023	021	8	7	16	19	21	22
027 031	025 027	12	11	24	28	32	34
035 ——	029 033	15	15	31	38	43	45
041 045	037 043	19	17	35	43	48	51
046	042	15	15	32	38	42	45
049 053	047 051	22	22	47	57	64	67
054 060	052 056	24	21	48	57	63	67
061	055	22	22	48	57	64	67
065	059	27	29	63	77	85	90
066 070	060 064	30	29	62	77	86	90
071	063	27	29	63	77	85	90
075	067	35	41	89	108	121	128
079	077	43	54	118	144	161	170
080 086	076 086	38	33	70	86	96	102
089	081	43	54	118	114	161	170
090	——	38	33	70	86	96	102
097	091	50	66	142	174	194	204
098 106	092 102	44	44	94	115	128	135
107	099	50	65	142	174	194	204
120	110	44	44	94	115	128	135
132 140	118 128	54	58	125	153	170	180
152	136	70	82	178	216	242	256
162 168 178	154 164 ——	86	108	236	288	322	340
194 202 212	182 190 196	100	130	284	346	386	410

NOTES: For R-134A multiply charge by 0.99; For R-404A multiply charge by 0.91; For R-502 multiply charge by 1.04.
For alternate T.D.'s, multiply by flooded charge T.D. factors in table 30.

Table 29. Flooded Charge T.D. Factor.

Ambient, °F	Design T.D.				
	30	25	20	15	10
+60	----	0.38	1.0	1.74	2.46
+40	0.59	0.80	1.0	1.19	1.40
+20	0.76	0.88	1.0	1.13	1.25
0	0.84	0.91	1.0	1.07	1.16
-20	0.88	0.93	1.0	1.05	1.13

Calculate Refrigerant Charge

Refrigeration operating charges are located in Table 28 for flooded condenser and Table 30 for fan cycling plus flooded condenser.

Charge for flooded condenser = summer charge (Table 28) + additional flooding charge (Table 28) * flooded charge T.D. factor (Table 29)

Charge for fan cycling + flooding = summer charge (Table 30) + additional charge for fan cycling (Table 30)

Example

Obtain the summer charge for a BRH 061. What is the flooding charge required to operate this condenser at 0° ambient at a 20°T.D. with R-22 refrigerant? What is the reduction in operating charge if fan cycling is combined with flooding?

Procedure

From Table 28, obtain the summer operating charge for a BRH-061 of 22 lbs. The charge for winter operation with flooded controls is equal to the summer operating charge of 22 lbs. plus the additional charge at 0° ambient (Table 28) of 64 lbs., times the flooded charge T.D. factor (Table 29) of 1.0 for 20°T.D.

Charge for flooded condenser = 22 + (64) * 1.0
= 86 lbs.

The charge for fan cycling plus flooded condenser is obtained using Table 30. Using this table obtain the additional charge for 20°T.D. at 0° ambient, which is 28 lbs. The total charge is the summer charge (22 lbs.) plus the additional charge.

Charge for fan cycle + flooding = 22 + 28
= 50 lbs.

The savings in refrigerant charge = 86 - 50
= 36 lbs.

Table 30. Additional Charge for Fan Cycling plus Flooded Condenser, Lbs. R-22.

Models		Refrigerant R-22 Charge for Summer Operation	25°T.D. Ambient				20°T.D. Ambient				15°T.D. Ambient				10°T.D. Ambient			
BRH	BRL		+40	+20	0	-20	+40	+20	0	-20	+40	+20	0	-20	+40	+20	0	-20
023	021	8	3	10	14	17	8	14	17	19	13	17	20	28	18	21	22	23
027 031	025 027	12	4	15	20	25	12	21	25	28	20	26	30	32	27	32	34	35
035 ——	029 033	15	5	20	28	34	17	28	34	38	26	34	40	42	36	42	45	47
041 045	037 043	19	0	7	20	28	0	19	28	35	17	30	38	42	32	41	46	50
046	042	15	5	20	28	34	16	28	34	38	26	34	40	42	36	42	45	46
049	047	22	0	9	26	37	0	25	38	47	22	40	50	56	42	54	61	66
053	051	22	0	0	14	26	0	11	28	38	9	30	42	57	34	49	56	61
054 060	052 056	24	8	29	41	50	24	41	50	57	40	51	59	63	54	63	67	70
061	055	22	0	0	14	26	0	11	28	38	9	30	42	51	34	49	56	61
065	059	27	0	0	18	35	0	15	38	51	11	40	56	67	45	65	75	81
066 070	060 064	30	11	40	55	67	33	55	67	75	53	69	79	84	73	84	90	94
071	063	27	0	0	18	35	0	15	38	51	11	40	56	67	45	65	75	81
075	067	35	0	0	5	31	0	0	34	58	0	38	70	83	49	79	98	112
079	077	43	0	0	8	41	0	0	46	77	0	51	94	111	65	106	130	149
080 086	076 086	38	0	15	40	55	0	38	57	70	33	59	75	84	63	82	91	99
089	081	43	0	0	5	27	0	0	30	51	0	34	62	73	43	70	86	98
090	——	38	0	15	40	55	0	38	57	70	33	59	75	84	63	82	91	99
097	091	50	0	0	0	17	0	0	18	49	0	24	56	77	34	73	95	109
098	092	44	0	18	53	74	0	50	75	94	44	79	99	112	84	108	121	132
106	102	44	0	0	14	53	0	22	57	77	17	59	84	102	67	98	112	121
107	099	50	0	0	0	17	0	0	18	49	0	24	56	77	34	73	95	109
120	110	44	0	0	14	53	0	22	57	77	17	59	84	102	67	98	112	121
132 140	118 120	54	0	0	37	70	0	30	75	103	22	81	112	135	90	131	150	162
152	136	70	0	0	10	62	0	0	68	116	0	76	140	166	98	158	196	224
162 168 178	154 164 ——	86	0	0	16	82	0	0	92	154	0	102	188	222	130	212	260	298
194 202 212	182 190 196	100	0	0	0	50	0	0	56	148	0	74	170	232	102	222	288	330

NOTES: For R-134A multiply charge by 0.99; For R-404A multiply charge by 0.91.; For R-502 multiply charge by 1.04.

Diagram 1. Typical Condenser Wiring Diagrams With No Fan Cycle Controls

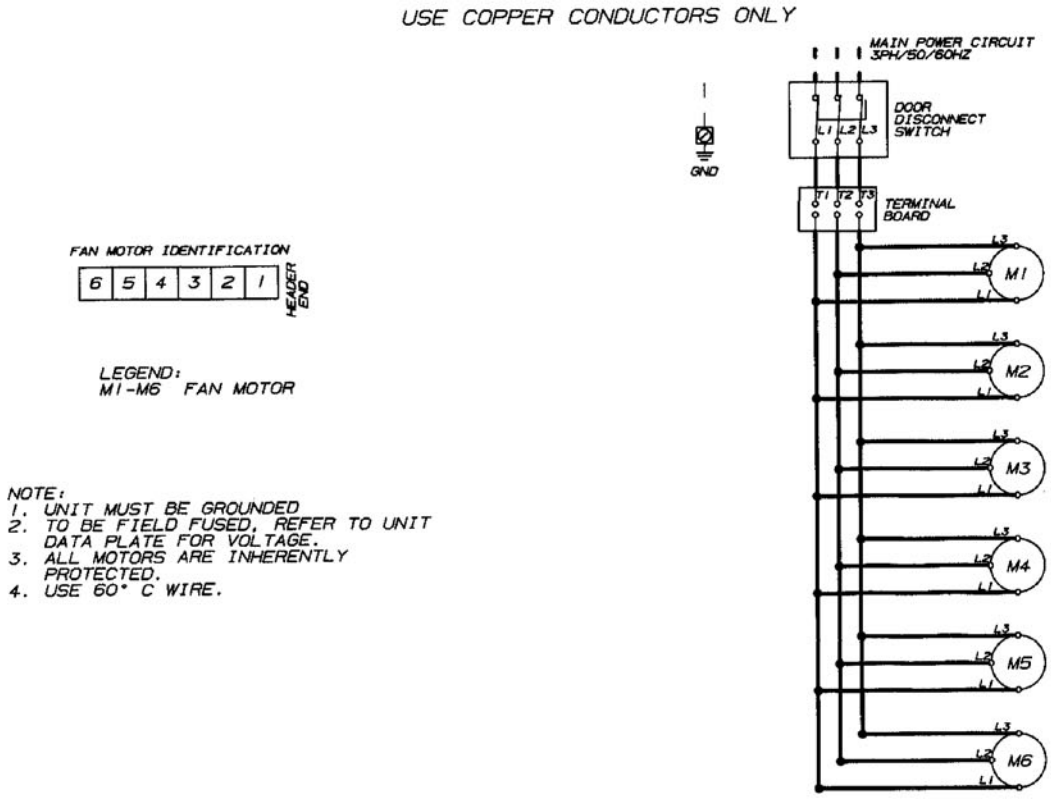

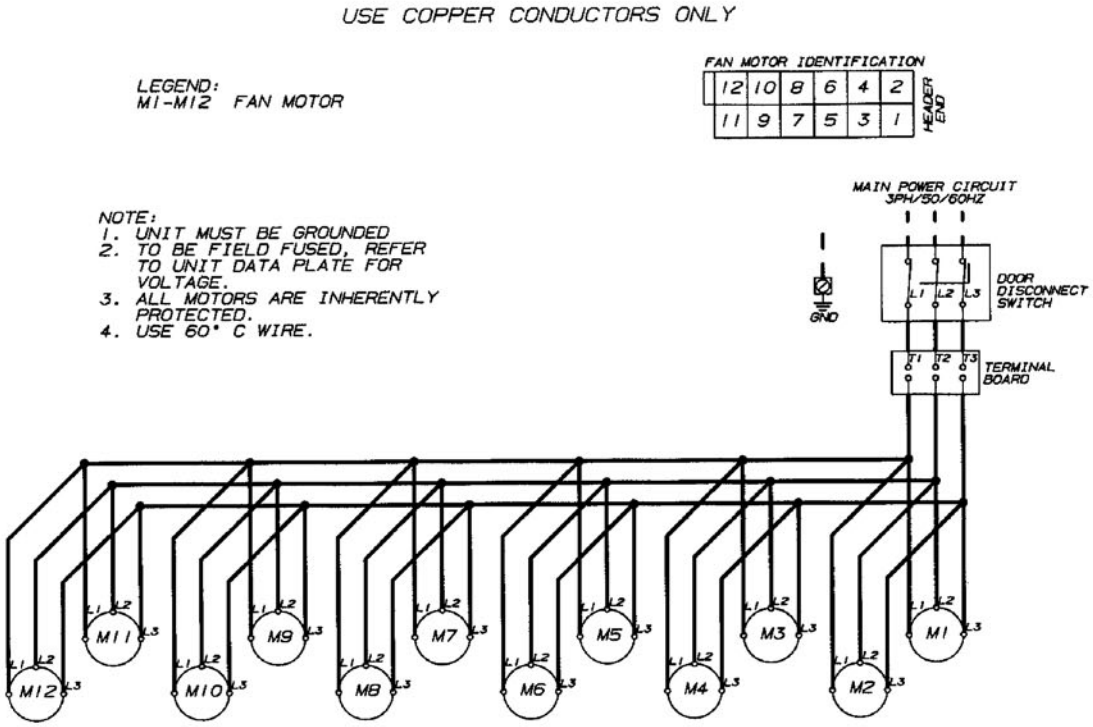

Diagram 2. Typical Condenser Wiring With Fan Cycle Controls

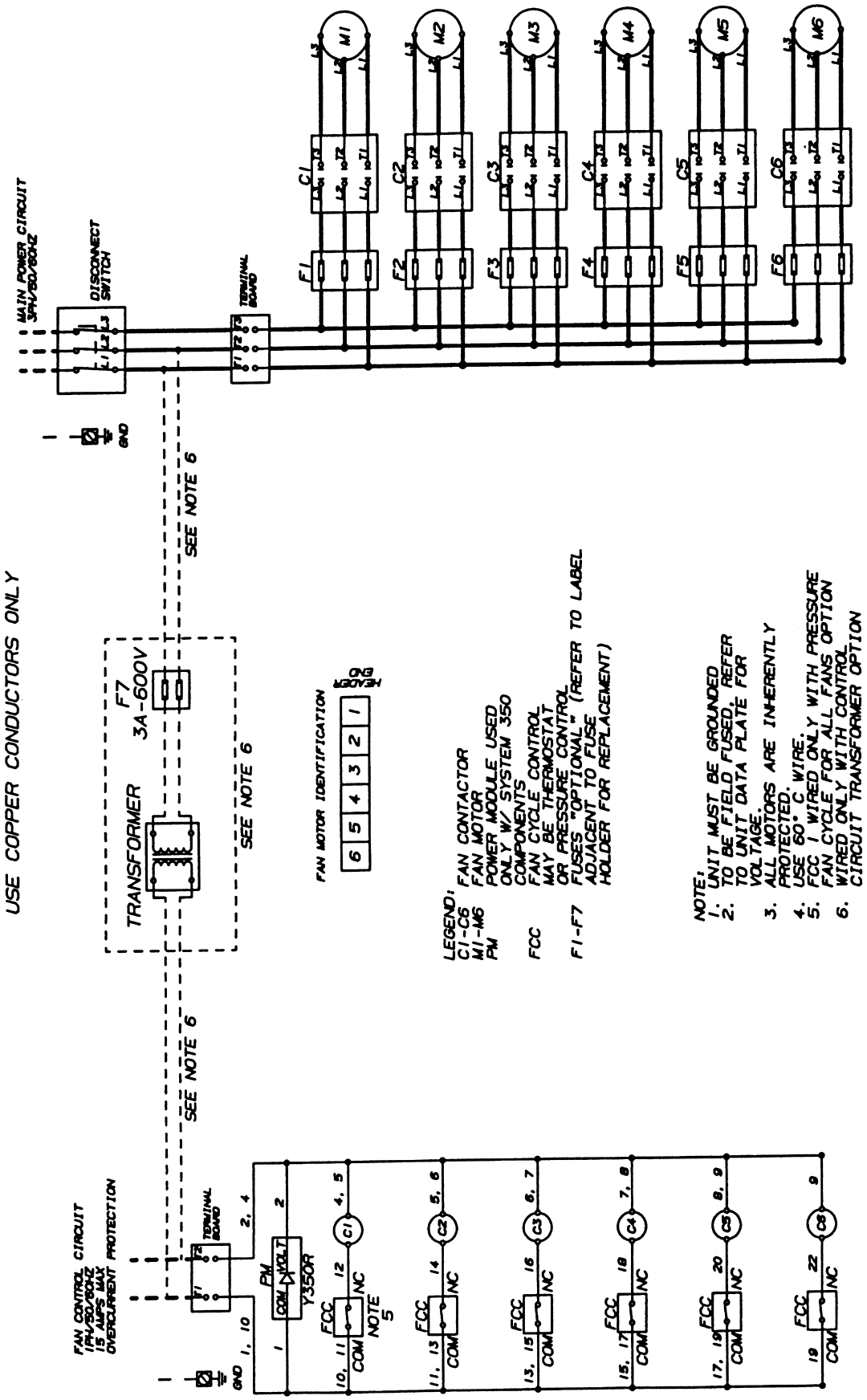

Diagram 3. Typical Condenser Wiring With Fan Cycle Controls

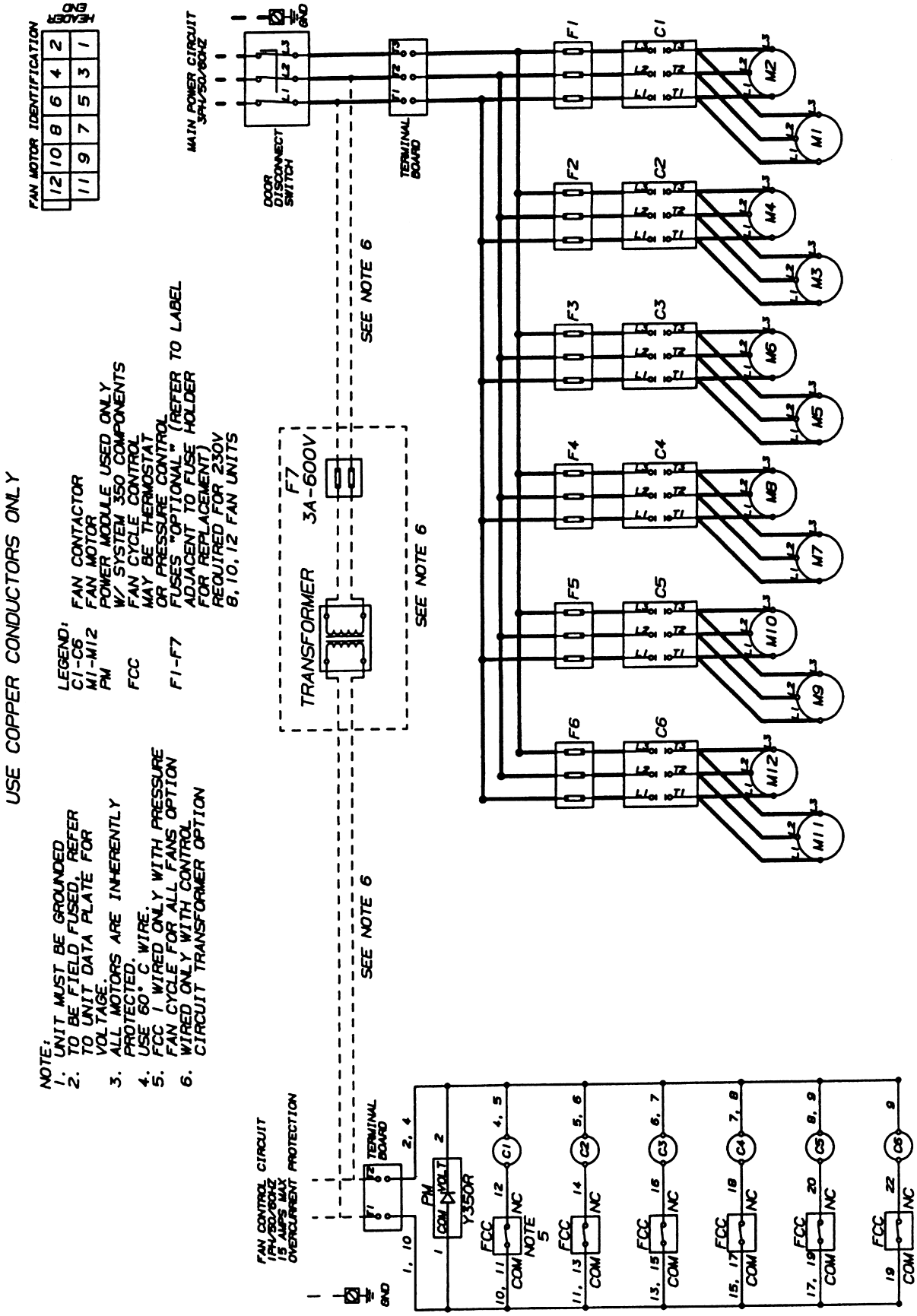

HEATCRAFT®
Refrigeration Products

BOHN®
The Cold Standard

A product line of
Heatcraft Refrigeration Products
2175 West Park Place Blvd., Stone Mountain, GA 30087
(770) 465-5600 • Fax: (770) 465-5990
Visit us at **www.heatcraftrpd.com** for literature online.